Price: $6.25

MODELS 92200/93200 SERIES TIME-MULTIPLEXED COMMUNICATION CHANNELS (TMCC) Technical Manual

SDS 900685C September 1965

SCIENTIFIC DATA SYSTEMS/1649 Seventeenth Street/Santa Monica, California/UP 1-0960

©1965 Scientific Data Systems, Inc.

Printed in U.S.A.

TABLE OF CONTENTS

Section			Page
I	GENERAL DESCRIPTION		
	1.1	General	1-1
	1.5	Purpose of Option	1-1
	1.7	Description and Leading Particulars	1-1
	1.10	Physical Description	1-4
	1.12	TMCC Models 922XX	1-4
	1.14	One Channel Configuration	1-4
	1.16	Two Channel Configuration	1-5
	1.18	Three Channel Configuration	1-5
	1.20	Four Channel Configuration	1-5
	1.22	TMCC Models 932XX	1-5
	1.24	One Channel Configuration	1-5
	1.26	Two Channel Configuration	1-5
	1.28	Three Channel Configuration	1-5
	1.30	Four Channel Configuration	1-5
	1.32	Semiconductor Complement	1-5
	1.34	Interlace Feature	1-5
II	PROGRAMMING		
	2.1	Purpose	2-1
	2.3	General Operation	2-1
	2.11	Direct Parallel Input/Output	2-1
	2.13	Single-Bit Input/Output	2-1
	2.15	Primary Input/Output Instructions	2-1
	2.16	Energize Output M (EOM)	2-2
	2.24	Skip If Signal Not Set (SKS)	2-3
	2.30	Communication Channel Input/Output	2-3
	2.31	General Information	2-3
	2.42	Communication Channel Description	2-4
	2.45	Time-Multiplexed Channel Registers	2-4
	2.51	Interlace Registers	2-5
	2.56	Communication Channel Programming	2-5
	2.58	Standard EOM Channel Instructions	2-6
	2.60	Alert Channel (ALC)	2-6
	2.62	Disconnect Channel (DSC)	2-6
	2.64	Alert to Store Address From Channel (ASC)	2-6
	2.68	Terminate Output of Channel (TOP)	2-7
	2.71	Compatible/Extended Input/Output Modes	2-7
	2.78	Input/Output Class EOM	2-7
	2.80	Terminal Functions; Extended Mode	2-8
	2.82	Input/Output of a Record and Disconnect (IORD)	2-9
	2.83	Input	2-9
	2.85	Output	2-9
	2.89	Input/Output Until Signal Then Disconnect (IOSD)	2-9
	2.90	Input	2-9
	2.92	Output	2-9
	2.94	Input/Output of a Record and Proceed (IORP)	2-9
	2.95	Input	2-9
	2.99	Output	2-10
	2.105	Input/Output Until Signal Then Proceed (IOSP)	2-10
	2.106	Input	2-10

TABLE OF CONTENTS (Continued)

Section		Page
2.109	Output	2-10
2.112	Channel and Device SKS	2-11
2.114	Channel Tests	2-11
2.115	Standard SKS Instructions	2-11
2.117	Channel Active Test (CAT)	2-11
2.121	Channel Error Test (CET)	2-11
2.125	Channel Zero Count Test (CZI)	2-12
2.128	Channel Inter-Record Test (CIT)	2-12
2.131	Device Tests	2-12
2.133	Single-Word Data Transfer Via Channels W (A) and Y	2-13
2.134	Instructions	2-13
2.137	Memory Into Channel W When Empty (MIW)	2-13
2.140	Channel W Into Memory When Full (WIM)	2-13
2.142	Memory Into Channel Y When Empty (MIY)	2-13
2.144	Channel Y Into Memory When Full (YIM)	2-13
2.146	Memory Into Channel A When Empty (MIA)	2-13
2.148	Channel A Into Memory When Full (AIM)	2-13
2.150	Single-Word Operations	2-13
III	THEORY OF OPERATION	
3.1	General	3-1
3.7	Character Buffer	3-1
3.9	Word Assembly Register	3-1
3.11	Unit Address Register	3-1
3.13	Word Counter	3-1
3.15	Address Counter	3-1
3.17	Input Process	3-3
3.23	Output Process	3-3
3.27	Parity	3-3
3.29	TMCC and Interlace Configuration	3-3
3.31	Detailed Description	3-3
3.34	Pulse Counter	3-3
3.39	Input/Output Processing	3-4
3.43	W Register	3-6
3.53	Input Process (W9 true)	3-9
3.78	Output Process (W9 true)	3-24
3.91	SYS Gate	3-31
3.94	Skip Gate	3-36
3.102	Interlace, Compatible Mode (Time Share)	3-36
3.131	Interlace, Extended Mode (Time Share)	3-46
3.134	IORD - Iwg $\overline{\text{Iwh}}$ $\overline{\text{Iwi}}$	3-48
3.135	Output	3-48
3.140	IOSD - Iwg $\overline{\text{Iwh}}$ Iwi	3-50
3.141	Output	3-50
3.144	IORP - Iwg Iwh $\overline{\text{Iwi}}$	3-50
3.145	Output	3-50
3.152	IOSP - Iwg Iwh Iwi	3-52
3.153	Output	3-52
3.158	IORD - Iwg $\overline{\text{Iwh}}$ $\overline{\text{Iwi}}$	3-53
3.159	Input	3-53
3.164	IOSD - Iwg $\overline{\text{Iwh}}$ Iwi	3-54
3.165	Input	3-54

TABLE OF CONTENTS (Continued)

Section		Page
3.168	IORP - Iwg Iwh $\overline{\text{Iwi}}$	3-55
3.169	Input	3-55
3.176	IOSP - Iwg Iwh Iwi	3-57
3.177	Input	3-57
3.180	Pin Address Counter	3-57
3.184	Glossary of Logic Terms	3-58
3.185	Logic Equations	3-61
3.186	Pulse Counter	3-61
3.187	Buc, Ioc, Sys, Etc.	3-61
3.188	CPU Signals Received	3-61
3.189	Input/Output Signals Generated	3-62
3.190	CPU Signals Generated	3-62
3.191	TMCC Signals Received	3-64
3.192	Input/Output Signals Received	3-64
3.193	TMCC Signals Generated	3-64
3.194	Logic Equations For W Buffer	3-64
3.195	Unit Address Register	3-64
3.196	Input/Output	3-64
3.197	Clear and Set Signals	3-64
3.198	Clock Counter	3-64
3.199	Character Counter	3-64
3.200	Character Counter Even	3-64
3.201	Halt Interlock	3-64
3.202	Computer Interlock	3-64
3.203	End-of-Record Detector	3-65
3.204	Halt Interlock	3-65
3.205	Signal Complete	3-65
3.206	Interrupt Signals	3-65
3.207	WIM + MIW Interlock =	3-65
3.208	Load Buffer From C	3-65
3.209	Time Share Request	3-65
3.210	Time Share Select	3-65
3.211	Time Share Priority	3-65
3.212	W Register	3-65
3.213	Character Buffer	3-66
3.214	Character Buffer Extended to 12 Bits	3-66
3.215	Character Buffer Extended to 24 Bits	3-66
3.216	Parity Flip-Flop	3-67
3.217	Error Detector	3-67
3.218	Interlace Prepare	3-67
3.219	Interlace Clear	3-67
3.220	Interlace Load	3-67
3.221	Interlace Active	3-67
3.222	Zero Count	3-67
3.223	Interlace Count Trigger	3-67
3.224	Interlace Counter Clock Enables	3-67
3.225	Extend Operations	3-67
3.226	Channel Command Interrupt Enables	3-68
3.227	Channel Command Register	3-68
3.228	Word Counter	3-68
3.229	Address Counter	3-68
3.230	PIN Address Counter	3-69

TABLE OF CONTENTS (Continued)

Section			Page
	3.231	Skip Gate	3-69
	3.232	Input/Output Signals Received	3-69
	3.233	Input/Output Signals Generated	3-69
	3.234	Logic Equations For Y Buffer	3-69
	3.235	Unit Address Register	3-69
	3.236	Input/Output	3-69
	3.237	Clear and Set Signals	3-70
	3.238	Clock Counter	3-70
	3.239	Character Counter	3-70
	3.240	Character Counter Even	3-70
	3.241	Halt Interlock	3-70
	3.242	Computer Interlock	3-70
	3.243	End-of-Record Detector	3-70
	3.244	Halt Detector	3-71
	3.245	Signal Complete	3-71
	3.246	Interrupt Signals	3-71
	3.247	YIM + MIY Interlock =	3-71
	3.248	Load Buffer From C	3-71
	3.249	Time Share Request	3-71
	3.250	Time Share Select	3-71
	3.251	Time Share Priority	3-71
	3.252	Y Register	3-71
	3.253	Character Buffer Extended to 12 Bits	3-71
	3.254	Character Buffer	3-71
	3.255	Character Buffer Extended to 24 Bits	3-71
	3.256	Parity Flip-Flop	3-72
	3.257	Error Detector	3-72
	3.258	Interlace Prepare	3-72
	3.259	Interlace Clear	3-73
	3.260	Interlace Load	3-73
	3.261	Interlace Active	3-73
	3.262	Zero Count	3-73
	3.263	Interlace Count Trigger	3-73
	3.264	Interlace Counter Clock Enables	3-73
	3.265	Extend Operations	3-74
	3.266	Channel Command Interrupt Enables	3-74
	3.267	Channel Command Register	3-74
	3.268	Word Counter	3-74
	3.269	Address Counter	3-74
	3.270	Pin Address Counter	3-74
	3.271	Skip Gate	3-74
	3.272	Input/Output Signals Received	3-74
	3.273	Input/Output Signals Generated	3-75
IV	INSTALLATION AND MAINTENANCE		
	4.1	General	4-1
	4.3	Installation	4-1
	4.5	Intercabling	4-1
	4.9	925/930 Computer W Channel Test Program	4-1
	4.11	9300 Computer A Channel Test Program	4-1
	4.13	Module Location	4-1
	4.15	Maintenance	4-1

TABLE OF CONTENTS (Continued)

Section			Page
	4.17	Periodic Inspection	4-1
	4.19	Corrective Maintenance	4-1
	4.21	Input/Output Signals and Timing Relationships	4-1
	4.24	Qq1, Qq2, and Qq3	4-9
	4.26	Eom, Buc, Ioc, Sys	4-9
	4.31	Pin, $\overline{Rt}$, $\overline{Cdn}$, $\overline{Rti}$	4-10
	4.34	Pot 1, Pot 2, Rt, Cn	4-11
	4.37	Skss, $\overline{Ssc}$	4-12
	4.40	Test Programs	4-13
	4.42	Extended Mode I/O Test Program For 925/930 Computers	4-13
	4.45	Fill	4-13
	4.47	Operation	4-13
	4.51	Punching	4-14
	4.55	Reading	4-14
	4.57	Test Program	4-14
	4.59	Extended Mode I/O Test Program For 9300 Computer	4-14
	4.62	Fill	4-14
	4.64	Operation	4-35
	4.68	Punching	4-35
	4.72	Reading	4-35
	4.74	Test Program	4-36
V	TROUBLESHOOTING		
	5.1	General	5-1
	5.4	Test Program Flow Chart	5-1
	5.6	Flow Chart Example	5-1
	5.13	Troubleshooting Information	5-15
	5.16	Troubleshooting	5-15
VI	DRAWINGS		
	6.1	General	6-1
	6.3	Scope of Section	6-1

LIST OF ILLUSTRATIONS

Number	Title	Page
1-1	TMCC Configuration, Models 922XX	1-2
1-2	TMCC Configuration, Models 932XX	1-3
3-1	Time Multiplexed Communication Channel With Interlace, Block Diagram	3-2
3-2	TMCC Information Flow Diagram, Input/Output (6 Bit)	3-5
3-3	Precession Loop and Input Parity Checking Logic	3-7
3-4	Input Clock Timing Charts (Typical)	3-10
3-5	Input Clock Timing Charts	3-11
3-6	Input Timing Chart (Two Characters Per Word)	3-13
3-7	Data Transfer From W Register to C Register	3-15
3-8	Information Flow Diagram - Phototape	3-16
3-9	Termination Timing A - Phototype Input	3-18

LIST OF ILLUSTRATIONS (Continued)

Number		Page
3-10	Termination Timing B - Phototype Input	3-19
3-11	Information Flow Diagram - Magnetic Tape	3-21
3-12	Input Timing - Magnetic Tape	3-22
3-13	Input Termination Timing - Magnetic Tape	3-23
3-14	Forward Scan Timing Chart - Magnetic Tape	3-25
3-15	Reverse Scan Timing Chart - Magnetic Tape	3-26
3-16	Output Information Flow Diagram	3-27
3-17	Output Timing Chart 1	3-29
3-18	Output Timing Chart 2	3-30
3-19	Output Termination Timing (Except Magnetic Tape)	3-32
3-20	Output Termination Timing - Magnetic Tape	3-33
3-21	Output Timing Chart - Punch	3-34
3-22	Output Timing Chart - Magnetic Tape	3-35
3-23	Information Flow - Interlace Operation	3-38
3-24	Interlace Word Counter - Typical Clock Input	3-39
3-25	Relationship of Instruction Bits to Address and Word Counter Bits	3-40
3-26	Interlace Register Loading Time Chart	3-41
3-27	Interlace Word Transfer Timing Chart	3-43
3-28	Interlace Input/Output Timing Chart	3-44
3-29	Interlace Output Timing Chart	3-45
3-30	Input Termination Timing Chart - Interlace (Compatible Mode)	3-47
4-1	Model 93200 TMCC, Intercabling Diagram	4-2
4-2	Model 93221 TMCC, Intercabling Diagram	4-3
4-3	Power Distribution Diagram	4-4
4-4	Module Location Diagram	4-5
4-5	Input/Output Signal Location Diagram	4-6
4-6	930/9300 Timing Diagram, (Qq1), (Qq2), (Qq3)	4-9
4-7	930/9300 Timing Diagram, (Eom), (Buc), (Ioc), (Sys)	4-9
4-8	930/9300 Timing Diagram, (Pin), (Rt), ($\overline{\text{Cdn}}$), (Rti)	4-10
4-9	930/9300 Timing Diagram, (Pin), ($\overline{\text{Rt}}$), ($\overline{\text{Cdn}}$), ($\overline{\text{Rti}}$), ($\overline{\text{Rt}}$), Initially False	4-10
4-10	930/9300 Timing Diagram, (Pin), ($\overline{\text{Rt}}$), ($\overline{\text{Cdn}}$), ($\overline{\text{Rti}}$), Effects of Time-Share	4-11
4-11	930/9300 Timing Diagram, (Pot 1), (Pot 2), (Rt), (Cn)	4-11
4-12	930/9300 Timing Diagram, (Pot 1), (Pot 2), ($\overline{\text{Rt}}$), (Cn), (Rt), Initially False	4-11
4-13	930/9300 Timing Diagram, (Pot 1), (Pot 2), ($\overline{\text{Rt}}$), (Cn), Effects of Time-Share	4-12
4-14	930/9300 Timing Diagram, (Skss), (Cn), ($\overline{\text{Ssc}}$)	4-12
5-1	Test Program Flow Chart	5-2

LIST OF TABLES

Table		Page
1-1	TMCC Models	1-1
1-2	Applicable Publications	1-1
1-3	Models 922XX Module Complement	1-4
1-4	Models 923XX Module Complement	1-6
3-1	Pulse Counter Truth Table	3-4
3-2	Value of Parity Timing Signal Qw1	3-14

LIST OF TABLES (Continued)

Table		Page
3-3	Value of Qw2 Parity Timing Signal	3-28
3-4	Interlace Extended - Mode Terminal Functions	3-49
4-1	924/930 Computers, W Channel Sample Test Program	4-7
4-2	9300 Computer, A Channel Sample Test Program	4-8
4-3	925/930 Computers Breakpoint Switch Functions	4-13
4-4	925/930 Computers, Extended Mode I/O Test Program	4-15
4-5	9300 Computer Breakpoint Switch Functions	4-35
4-6	9300 Computer, Extended Mode I/O Test Program	4-37
5-1	IOSP Output Functions, W (A) Channel	5-15
5-2	IORD Output Functions, W (A) Channel	5-16
5-3	IOSD Output Functions, W (A) Channel	5-16
5-4	IORD Output Functions, W (A) Channel	5-17
5-5	IOSP Input Functions, W (A) Channel	5-17
5-6	IORP Input Functions, W (A) Channel	5-18
5-7	IOSD Input Functions, W (A) Channel	5-18
5-8	IORD Input Functions, W (A) Channel	5-19
5-9	Output Functions, Y Channel	5-19
5-10	Input Functions, Y Channel	5-20

SECTION I
GENERAL DESCRIPTION

1.1 GENERAL

1.2 This publication provides information relating to the Time-Multiplexed Communication Channel option manufactured by Scientific Data Systems, 1649 Seventeenth Street, Santa Monica, California.

1.3 In this publication, the Time-Multiplexed Communication Channel option is referred to as "TMCC". The models covered, with their description and the figure references, are listed in table 1-1.

Table 1-1. TMCC Models

Model	Description	Channel Used	Figure
92200	6-bit characters with interlace	W(A), C	1-1
92210	6-bit characters with interlace	Y(B), D	1-1
92201	12-bit characters with interlace	C	1-1
92211	12-bit characters with interlace	D	1-1
92202	24-bit characters with interlace	C	1-1
92212	24-bit characters with interlace	D	1-1
93200	6-bit characters without interlace, single channel	W(A), C	1-2
91210	Interlace option for Model 93200		
93201	12-bit character extension option for Model 93200		
93202	24-bit character extension option for Model 93200		
93221	6-bit characters without interlace, two channels	W + Y (A + B)	1-2
91210	Interlace option for either channel of Model 93221		
93201	12-bit character extension option for Model 93221		
93202	24-bit character extension option for Model 93221		

1.4 The information in this publication relates to the TMCC as utilized with the 925/930/9300 computers. Other publications containing information relating to the TMCC and input/output operation are listed in table 1-2.

Table 1-2. Applicable Publications

Title of Publication	Publication No.
SDS 925/930/9300 TMCC Input/Output Unit Logic Layouts, Current and History	900557
SDS 925 Computer Reference Manual	900099
Model 925 Computer, Technical Manual	900633
SDS 930 Computer Reference Manual	900064
Model 930 Computer, Technical Manual	900066
SDS 9300 Computer Reference Manual	900050
Model 9300 Computer, Technical Manual	900570

1.5 PURPOSE OF OPTION

1.6 The TMCC is a time-multiplexed input/output channel utilized for communication between peripheral devices and the 925/930/9300 computers. Its operation is designated "time-multiplexed" because it gains access to the computer memory through the same path utilized by the computer and must, therefore, momentarily interrupt computation to store or obtain a word of information. Up to four TMCCs may be connected to one computer and all may be active simultaneously but since their operation is time-multiplexed, only one channel at a time communicates with the computer memory.

1.7 DESCRIPTION AND LEADING PARTICULARS

1.8 A computer may have from one to four TMCCs connected to it. These are designated by letter symbols in the order of their installation. When only one

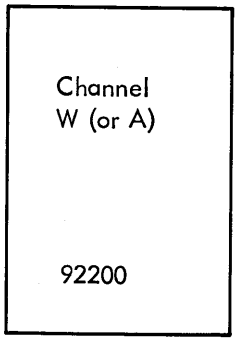

One Channel Configuration

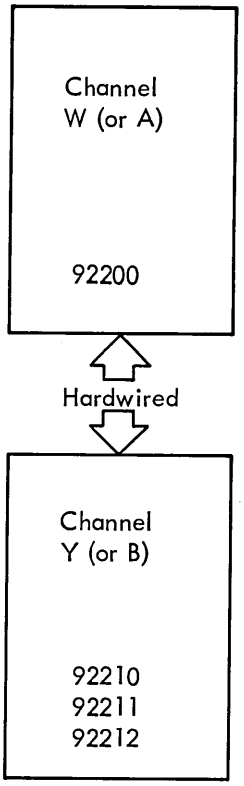

Two Channel Configuration

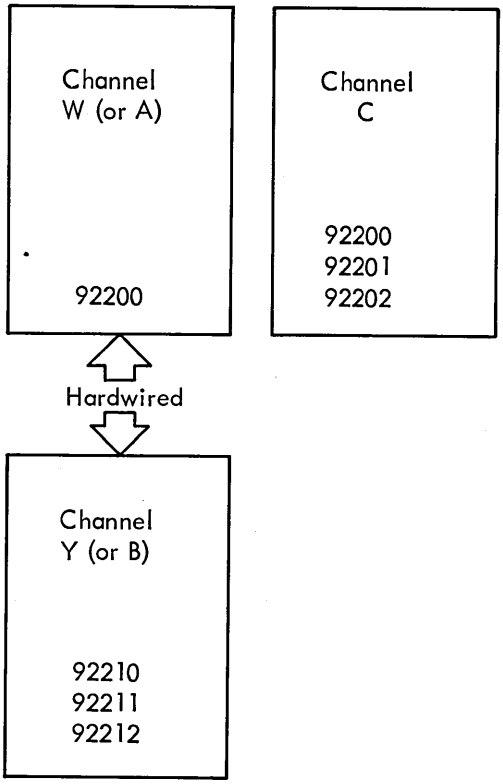

Three Channel Configuration

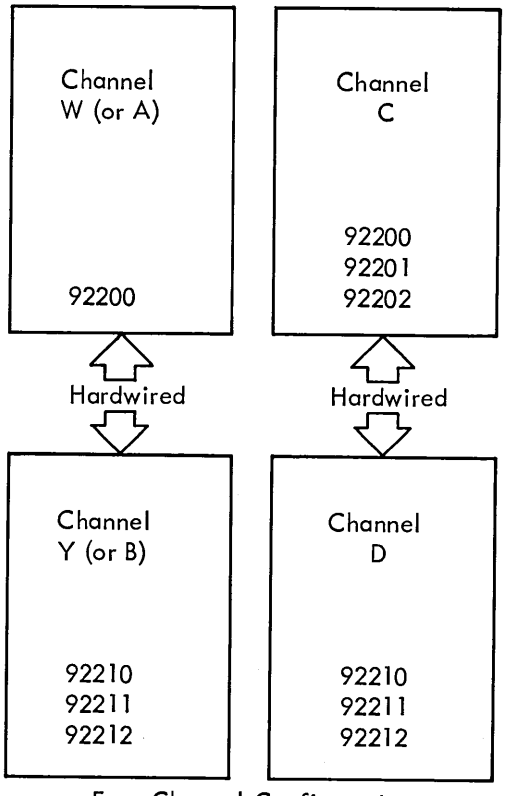

Four Channel Configuration

Figure 1-1. TMCC Configuration, Models 922XX

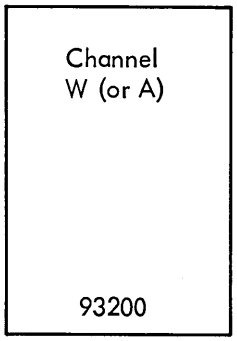

One Channel Configuration

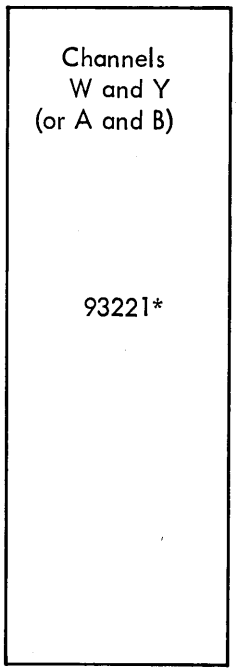

Two Channel Configuration

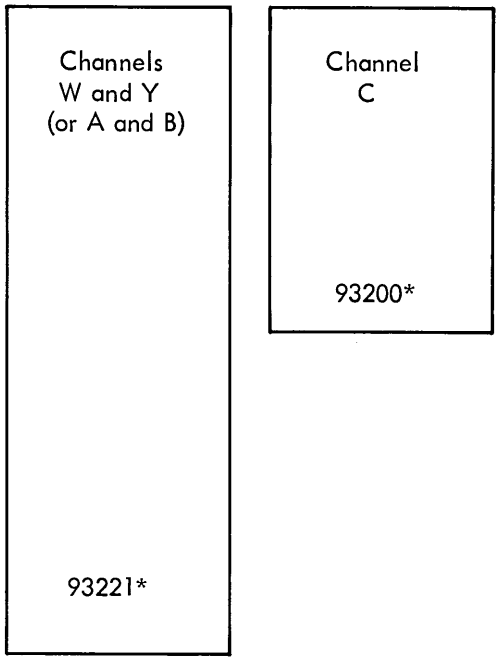

Three Channel Configuration

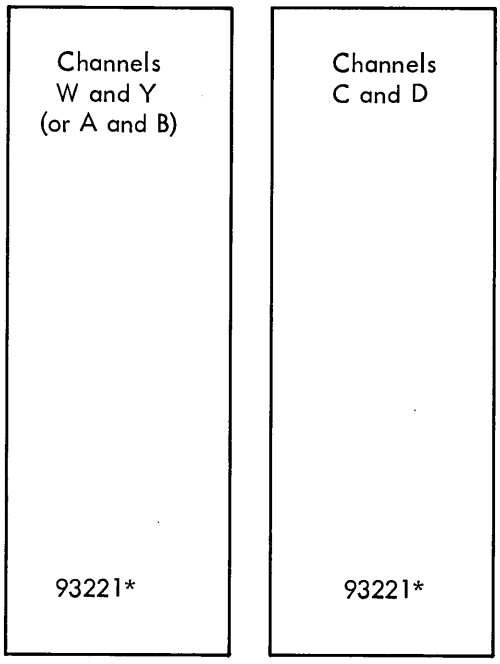

Four Channel Configuration

*Note: The Interlace feature, Model 91210, is required on channels B, C and D, and is optional on W, A and Y. All channels may have 93201 or 93202 options.

Figure 1-2. TMCC Configuration, Models 932XX

channel is used it is specified as the W channel on the 925 and 930 computers or as the A channel on the 9300 computer. As additional channels are added they are designated, in order, Y (or B on the 9300 computer), C, and D. Because single-word input/output instructions (Memory Into W, Memory Into Y, Memory Into A, W Into Memory, Y Into Memory, and A Into Memory) are not available for all channels, the interlace feature is mandatory on channels B, C, and D.

1.9 Primary differences between the models occur in the hardware layouts, connections between channels, and the options available.

1-10 PHYSICAL DESCRIPTION

1.11 The TMCC consists of plug-in modules contained in chassis consisting of four or six rows of modules. Each row contains 32 connectors thereby allowing the insertion of up to 32 modules in each row. Physical location of each module is given in Section 4 of this manual.

1.12 TMCC Models 922XX

1.13 In TMCC Models 922XX, the character length is fixed for a particular model and the interlace feature is included. One channel must be six bits to allow entering a program into the computer.

1.14 One Channel Configuration

1.15 A one channel configuration TMCC (Model 92200) consists of a single chassis containing four rows of modules (C through F). The quantity and type of modules are listed in table 1-3.

Table 1-3. Models 922XX Module Complement

Item	Description	Model	Quantity					
			92200 6-Bit "W" "A" or "C"	92201 12-Bit	92202 24-Bit	92210 6-Bit "Y" "B" or "D"	92211 12-Bit "Y" "B" or "D"	92212 24-Bit "Y" "B" or "D"
1	Triple Flip-Flop	FB52	19	21	25	18	20	24
2	NAND Flip-Flop	FB54	14	14	14	13	13	13
3	Cable Driver No. 2	AB55	2	2	2	1		
4	NAND No. 2	IB56	5	5	5	5	5	5
5	Band NAND	IB57	4	4	4	4	4	4
6	NAND Module	IB52	2	2	2			
7	Shift Register	DB50	3	3	3	3	3	3
8	Receiver Inverter Buffer	AB53	2	2	2			
9	Termination Module	ZB52	2	2	2			
10	Interface +8 to +4	NB50	1	2	2	1	1	1
11	Cable Driver	AK53	9	10	11	3	1	2
12	Cable Driver	NB52	3	3	3			
13	Termination Module +4	ZB50	7	7	7	7	7	7
14	Termination Module	ZB55	1			1		
15	Receiver, Inverter	AB52	2	2	2			
16	NAND No. 4	IB59	5	5	5	4	4	4
17	Schmitt Trigger	AK54	1	1	1			
18	Termination Module	ZB56		1			2	
19	Termination Module	ZB57			1			2

1.16 Two Channel Configuration

1.17 A two channel configuration TMCC consists of two chassis, one containing four rows of modules (C through F) and the other containing two rows of modules (A and B). These two chassis are physically bolted together and hardwired to allow mounting as a single unit. The two channel configuration consists of a Model 92200 for channel W (or A) and either a six bit option (92210), a twelve bit option (92211) or a twenty-four bit option (92212) for channel Y (B). The options selected determine the quantity and type of modules. Table 1-3 lists the modules required for each model.

1.18 Three Channel Configuration

1.19 The three channel configuration consists of three chassis, two containing four rows of modules and the third containing two rows of modules. Channel W (or A), consists of a Model 92200; channel Y (or B) consists of a six bit option (92210), a twelve bit option (92211), or a twenty-four bit option (92212); channel C consists of a six bit option (92200), a twelve bit option (92201), or a twenty-four bit option (92202). The quantity and types of modules for each option are listed in table 1-3.

1.20 Four Channel Configuration

1.21 The four channel configuration consists of four chassis, two containing four and two containing two rows of modules. The four channel configuration consists of a Model 92200 for channel W (A); a six bit option (92210), a twelve bit option (92211) or a twenty-four bit option (92212) for channel Y (B); a six bit option (92200), a twelve bit option (92201), or twenty-four bit option (92202) for channel C; and a six bit option (92210), twelve bit option (92211), or a twenty-four bit option (92212) for channel D. The quantity and types of modules are listed in table 1-3.

1.22 TMCC Models 932XX

1.23 In TMCC Models 932XX, the interlace registers are optional equipment. Interlace options may be installed in any of the four TMCCs that a 925/930/9300 computer may have. However, channels C and D (and B on the 9300 computer) must have interlace installed since there are no computer instructions allowing use of these channels without it.

1.24 One Channel Configuration

1.25 A one channel configuration TMCC (Model 93200) consists of a single chassis containing four rows of modules. The quantity and types of modules are listed in table 1-4.

1.26 Two Channel Configuration

1.27 The two channel configuration consists of a single chassis containing six rows of modules. For channels W and Y, a Model 93221 TMCC may be used. The Model 93221 may be extended to twelve bit or twenty-four bit characters by addition of modules as listed in table 1-4. The Model 93221 must have the Model 91210 Interlace installed in either or both channels. The modules comprising the Model 91210 Interlace are indicated in table 1-4.

1.28 Three Channel Configuration

1.29 A three channel configuration TMCC consists of a single chassis containing six rows of modules and another chassis of four rows of modules. Channels W and Y (or A and B) are as given in paragraph 1.27. Channel C consists of a Model 93200 TMCC (with character extension options) and must include a Model 91210 Interlace.

1.30 Four Channel Configuration

1.31 A four channel configuration TMCC consists of two chassis, each containing six rows of modules. Two Model 93221 TMCCs may be used with character extension options if desired. Model 91210 Interlace options must be installed on at least channels C, and D (and B on the 9300).

1.32 SEMICONDUCTOR COMPLEMENT

1.33 The semiconductor complement may be derived from the Material Lists and Module Data Sheets contained in Section 6. The module complement for each model of TMCC is contained in tables 1-3 and 1-4.

1.34 INTERLACE FEATURE

1.35 The purpose of the interlace feature is to provide the TMCC with a means of transferring blocks of words without requiring a separate instruction for each word. To do this, two counters are added to the TMCC. One counter is loaded with a count of the number of words in the block, and the other counter is loaded with the address of the memory position of the first word in the block. Then, as each input or output word is transferred to or from memory, the Word Counter and the Address Counter are incremented. The Word Counter holds the one's complement of the count; thus the count is decreased as the counter counts up. In addition to the two counters, the interlace logic also includes Channel Command Interrupt Enables, and all the necessary control logic.

Table 1-4. Models 923XX Module Complement

Item	Description	Model	Quantity				
			93200 6-Bit "W"	93221 6-Bit "W" & "Y"	93201 12-Bit "W" or "Y"	93202 24-Bit "W" or "Y"	91210 Interlace "W" or "Y"
1	Triple Flip-Flop	FB52	6	11	2	6	13
2	NAND Flip-Flop	FB54	13	25	-	-	1
3	Cable Driver No. 2*	AB55	3	4	-	-	-
4	NAND No. 2	IB56	4	8	-	-	1
5	Band NAND	IB57	3	7	-	-	1
6	NAND Module	IB52	2	2	-	-	-
7	Shift Register	DB50-2	3	6	-	-	-
8	Receiver Inverter Buffer	AB53	2	2	-	-	-
9	Termination Module	ZB52	2	2	-	-	-
10	Interface +8 to +4	NB50	1	2	1	1	-
11	Cable Driver	AK53	9	13	1	2	-
12	Driver Cable Interface	NB52	1	1	-	-	2
13	Termination Module +4	ZB50	6	10	0	0	1
14	Priority Interrupt**	SK61	2	2	-	-	-
15	Receiver Inverter	AB52	2	2	-	-	-
16	NAND No. 4	IB59	3	5	-	-	3
17	Schmitt Trigger	AK54	1	1	-	-	-

*SK61s are located in computer basic interrupt: 925/930 Reference Drawing 107352
9300 Reference Drawing 107626

**One AB55 is located in 5E (930 only) if I/O is used as a "C" or "C-D" channel.

SECTION II
PROGRAMMING

2.1 PURPOSE

2.2 The 925/930/9300 computers include as standard equipment one Time-Multiplexed Communication Channel (TMCC), without interlacing capability, as well as provision for three additional channels. The interlace unit is available as an option. The W and Y channels are available with or without interlace; the C and D channels are available only with interlace. The W channel on the 925 and 930 computers is equivalent to the A channel on the 9300 computer and the Y channel on the 925 and 930 computers ie equivalent to the B channel on the 9300 computer. (The B channel on the 9300 must also have the interlace feature). These channels are capable of automatically controlling the flow of data to and from memory at rates up to one word every 3.5 microseconds. These channels run independently of the central processor and only communicate with it to transfer data to or from memory.

2.3 GENERAL OPERATION

2.4 Utilizing channels W and Y (or A), characters, and words can be transmitted between memory and peripheral devices under the direct control of single instructions. Each of these channels has associated with it two instructions to facilitate direct control operations. For channel W, W INTO MEMORY (WIM) (channel A, A INTO MEMORY (AIM)), causes a word from a peripheral transmission to be taken from the channel W (A) buffer register and placed directly in the specified memory location without disturbing any internal registers. MEMORY INTO W (MIW), (MEMORY INTO A (MIA)), causes a word to be taken from a specified memory location and placed in the channel W (A) buffer register to be read out to the currently operating peripheral device connected to the channel. WIM (AIM) and MIW (MIA) are preceded by instructions from the EOM group that set up the input/output operation. YIM and MIY instructions function in an analogous manner for channel Y. The general test instruction, SKIP IF SIGNAL NOT SET (SKS) provides the facility for testing error indications and/or for testing various peripheral device indicators.

2.5 Additionally, using any channel including channels W and Y (A and B) with interlace, data can be transmitted to and from core storage under channel control. Operation of a channel is initiated by the execution of a sequence of instructions in the central processor. Once started, the channel operates independently of the central processor, automatically transferring each word at the correct time.

2.6 Three instructions control the process of transmitting and receiving data between channel peripheral equipment and the central processor. These instructions are:

EOM	ENERGIZE OUTPUT M
POT	PARALLEL OUTPUT
SKS	SKIP IF SIGNAL NOT SET

2.7 EOM instructions activate one of channels W (A), Y (B), C, or D, to select the peripheral device to be used, and to set up the initial conditions of the data transmission, including the peripheral operation to be performed. An EOM instruction also specifies terminal conditions for an operation.

2.8 PARALLEL OUTPUT (POT) instruction sends out to the channel the number of words in the transmission and the address at which the output begins.

2.9 SKIP IF SIGNAL NOT SET (SKS) instruction can test the Error indicators, End-of-Transmission indicators, and other input/output control indicators, such as printer end-of-form or card hopper empty.

2.10 The general order of use of these instructions for interlaced operation is:

Instruction	Function
EOM	to address the channel, connect the peripheral device, specify various input/output conditions, and alert the optional channel interlace (see Communication Channel Input/Output, paragraph 2.30).
EOM	to specify the terminal conditions and interrupts desired during the transmission
POT	to transmit to the channel a word containing the transmission starting address and block length

Bits 0 through 9 of this latter word contain the ten lower order bits of the word count; bits 10 through 23 contain the 14 bits of the starting address. The second EOM contains the high-order bits of the word count and starting address when needed.

2.11 DIRECT PARALLEL INPUT/OUTPUT

2.12 The direct parallel input/output (POT/PIN) facility allows any word in core memory to be presented, in

parallel, at any special system connector or applicable standard peripheral connector; or, conversely, allows signals sent to a connector to be stored in any core memory location. EOM and SKS instructions control parallel input/output operations in the same way as in channel operations. POT/PIN instructions also generate or check for correct parity with each word transmitted.

2.13 SINGLE-BIT INPUT/OUTPUT

2.14 EOM and SKS instructions also perform single-bit input/output and testing for special or standard devices. The execution of an EOM transmits a single signal of approximately 1.4 microseconds duration to an external connector and also provides the connector with a 15-bit address for the destination of this signal. SKS tests whether a similar signal is present on an external connector and skips accordingly.

2.15 PRIMARY INPUT/OUTPUT INSTRUCTIONS

2.16 ENERGIZE OUTPUT M (EOM)

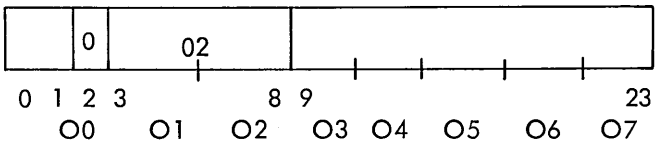

2.17 The major instruction for preparing channel W (or Y, C, D) and an attached peripheral device to perform a data transmission or other peripheral activity is the multi-purpose instruction, ENERGIZE OUTPUT M (EOM). This instruction operates in four distinct modes with many functional configurations. These modes are Buffer Control, Input/Output Control, Internal Control, and System Control. In the third and fourth modes, EOM controls and initiates non-communication channel operations such as special systems transmissions. Each of the frequently used EOM instruction configurations has a mnemonic tag used with standard SDS assemblers. The different modes of operation are program-selectable by the setting of two bits (10, 11 of octal position 3) within the EOM instruction format:

Octal Value	Bit Position 10	Bit Position 11	Area
0	0	0	Buffer Control
1	0	1	Input/Output Control
2	1	0	Internal Control
3	1	1	System Control

2.18 A Buffer Control mode EOM operates essentially as a set-up or preparation facility for data transmissions or other peripheral activities using the channel. The channel to be used, the peripheral unit on that channel, the operation to be performed, and the type of character format to be used are all detailed within this EOM. It also details the use of BCD or binary data transmission, the allowance or not of a leader (as in paper tape), and the direction of operation (as in forward direction for magnetic tape). Execution of such an EOM "connects" the specified peripheral unit to the channel. An EOM in this mode can also alert the interlace, which is the optional, automatic buffer control for input/output.

2.19 An EOM in the Input/Output mode directs peripheral devices to perform non-transmitting operations such as rewind magnetic tape and upspace the printer. This EOM selects certain channel operations such as interrupt response and input/output terminal function desired. It alerts peripheral devices that a PARALLEL INPUT (PIN) or PARALLEL OUTPUT (POT) instruction follows. It also can give an extension of the word count to 15-bits for the number of words to be transmitted and an extension of the address specification to 15-bits. Without disturbing the associated channel, this EOM can also set up the interlace unit. It is with the input/output mode EOM that the user selects his I/O operation as compatible or extended I/O modes.

2.20 This coding sequence initiates such an interlaced channel operation (compatible mode):

Instruction	Function
EOM (Input/Output Control Mode)	Alert the interlace
POT	transmit starting address and block length to interlace
EOM (Buffer Control Mode)	address channel, connect peripheral device, specify various input/output conditions, start transmission

2.21 Initiating an interlaced input/output operation via this sequence of instructions facilitiates checkout by allowing the programmer to single-step through this portion of the program. The first two instructions, EOM (Ioc) and POT, set up the interlace with data address and block length. Therefore, single-stepping through the sequence allows the interlaced channel to complete the input/output operation. When a single EOM (Buffer Control mode) sets up the channel and interlace with a POT instruction following, the programmer cannot step through the sequence since the input/output operation proceeds before the next stepped instruction (POT) places the address and block length in the interlace.

2.22 An EOM in the Internal Control mode enables and disables the interrupt system. EOM in this mode also

can prepare the system for the selective arming and disarming of the system interrupt levels. This mode does not directly concern the input/output programmer.

2.23 An EOM in the System Control mode is specifically coded for a given installation and system. Address capability is 15-bits or 32,768 combinations for these special system designations.

NOTE

If an interrupt occurs during the execution of an EOM in any mode, no acknowledgement occurs until the completion of the execution of the instruction following the EOM.

2.24 SKIP IF SIGNAL NOT SET (SKS)

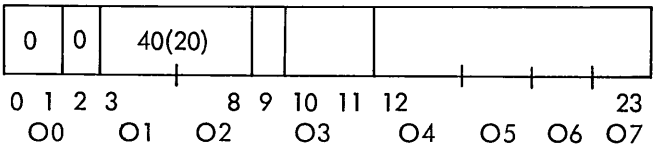

2.25 The principal instruction for testing the states and responses of data channels and their attached peripheral devices, as well as testing internal and external indicators, is the multi-purpose instruction, SKIP IF SIGNAL NOT SET (SKS). SKS is a "skip class" instruction yielding a decision and transfer capability to all channels, devices, indicators, and systems that require it. It operates in four distinct modes: Special Internal Test, Channel and Device Test, Internal Test, and Special System Test. In the second mode, SKS tests channel-oriented, input/output functions. Each of the frequently used SKS instruction configurations has a mnemonic tag, used with SDS assemblers.

2.26 These different modes of operation are program-selectable by the setting of two bits (10, 11 of octal position 3) within the SKS instruction format:

Octal Value	Bit Position 10	Bit Position 11	Area
0	0	0	Special Internal Test
1	0	1	Channel and Device Test
2	1	0	Internal Test
3	1	1	Special System Test

2.27 In the Channel and Device Test mode, SKS tests a channel for channel Ready (not active), interlace Word Count Equal to Zero, and Error. This mode also tests peripheral devices directly. These include testing indicators in a magnetic tape unit such as Beginning-of-Tape, End-of-Tape, File-Protect Ring present, and End-of-File. For example, an SKS instruction might address an indicator within the printer to determine whether the paper is at the End-of-Form.

2.28 In the Internal Test mode, SKS tests whether the interrupt system is enabled or disabled, whether a breakpoint switch is set, and whether Overflow is set.

2.29 In the Special Internal and Special System Test modes, SKS tests signals of special configuration as the specific system requires.

2.30 COMMUNICATION CHANNEL INPUT/OUTPUT

2.31 GENERAL INFORMATION

2.32 SDS Communication Channels provide fully buffered, input/output control and transmission, multiplexed or simultaneous with computation. Up to four data channels can connect to the central processor, all operating independently of each other.

2.33 Each channel can control as many as 30 input/output devices and automatically handles character, word assembly and disassembly, input/output parity detection and generation, data transmission to and from memory, and End-of-Transmission detection.

2.34 All channels are bi-directional and can communicate with 6-bit character devices or word devices of up to 24-bits. In the case of character-oriented devices, the program specifies the number of characters to be contained in each word during the transmission.

2.35 A channel buffer assembles and disassembles data words as they are transmitted between core memory and the peripheral equipment. The buffer maintains control of operations such as characters per word transmitted and direction of peripheral operation (as in magnetic tape forward/reverse).

2.36 A Buffer Control mode EOM sets up the channel buffer for operation. The execution of this EOM sets the operation controls, places the unit address in the buffer, and initiates data assembly/disassembly. The presence of the unit address activates the buffer, causing it to look for data coming from the peripheral device or from memory, as determined by the unit address.

2.37 When in use, a channel interlace controls the transfer of the data words going through the associated channel buffer. This interlace supplies the memory address of data coming from or going to memory and maintains the word count determining the number of words transferred. The terminal interrupts,

End-of-Record and Zero Word Count, come from the interlace and are under its control. The interlace controls input/output termination functions during interlaced operation.

2.38 Two EOM instructions and a POT instruction alert and set up a channel interlace. The first EOM alerts the interlace, that is activates the interlace and instructs it to expect a word count and starting address to be sent to it by the POT instruction. The second EOM is an Input/Output mode EOM that specifies the interrupt and the terminal function to be used. This EOM also can specify a 15th address bit and five more high-order word count bits expanding the word count from 10-bits to 15. This sequence is written: EOM (Alert), EOM (I/O), and POT. When the channel buffer is being set up at the same time, the buffer control EOM can alert the interlace. When the buffer is already set up, during a continuing I/O operation, the programmer may use the I/O EOM, ALERT CHANNEL (00250000), to alert the interlace.

2.39 When the programmer does not desire to program the Extended Mode with the input/output terminal functions, interrupts, and additional count or address, only the EOM (Alert) and the POT are necessary to set up the channel interlace (Compatible mode).

2.40 In the Extended Mode, the four channels are programmed in the same way.

2.41 The Time-Multiplexed Channels use the memory logic of the central processor to facilitate input and output of data words. The transfer of each word between a time-multiplexed channel buffer and memory requires two memory cycles. During this time, computation stops in the central processor. Priority for the use of the word input/output logic is in the order: Channel D, C, Y(B), W(A). Any Time-Multiplexed Channel operating with interlace has priority over the central processor for memory access.

2.42 COMMUNICATION CHANNEL DESCRIPTION

2.43 Up to 30 peripheral devices may be connected to one channel. Each of these devices has a unique, two-digit, octal address by which it is selected for an input/output operation. To select the peripheral device, the program loads the proper unit address into the 6-bit Unit Address Register (UAR) in the channel buffer. This address selects both the device and, if appropriate, the function to be performed. Placing a non-zero unit address in the Unit Address Register "connects" the peripheral unit addressed to the channel and it becomes "active". When the UAR contains a zero address, or any time that a terminal or initial condition clears the contents of UAR, the channel is "inactive." The zero in UAR also means that it is not connected to a peripheral unit.

2.44 When the channel and the peripheral unit to be used have been connected, the channel must have information pertaining to the location in memory of the data to be transmitted or received and pertaining to the number of data words in the transfer.

2.45 TIME-MULTIPLEXED CHANNEL REGISTERS

2.46 In the Time-Multiplexed Channels W(A) through D, there are two registers important to the programmer, the Word Assembly Register (WAR) and the Single-Character Register (SCR). The WAR, a 24-bit, word-sized buffer, contains the word of data actively being received or transmitted during an input or output operation. During input, 6-bit characters (plus parity) enter the Single-Character Register where the channel buffer assembles them, one at a time, into the WAR. Then the completed word is placed in memory. Depending on the number of characters per word specified, the word assembled and placed in memory during input has the form:

Word in Memory

One character per word mode

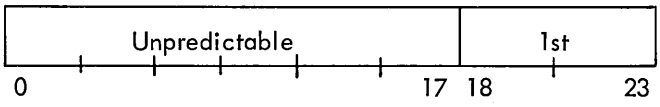

Two characters per word mode

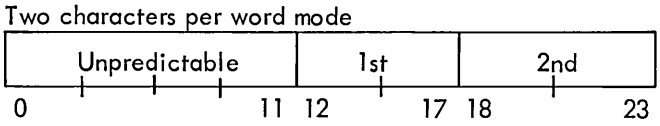

Three characters per word mode

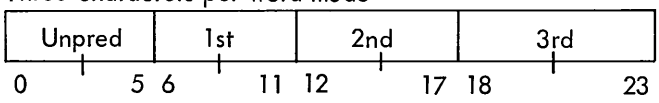

Four characters per word mode

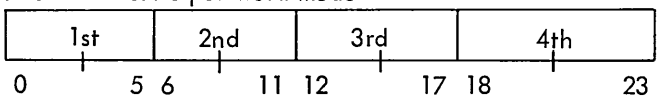

2.47 The unfilled character positions contain unpredictable data. When assembled during a one-word operation, a WIM (AIM) instruction places the word into memory. Under interlace control, the interlaced channel automatically places the word in memory when assembled.

2.48 When the end of an information record is detected by a buffer, the buffer automatically disengages from

the device and is then "ready" for another operation. The buffer logic is reset, except that the state of the error indicator is maintained and the last word of the input is still in the word register. If the number of characters in the input record was not a multiple of the number of characters assembled into each computer word, then zeros are automatically forced into the least significant positions of the last word. This last word can then be stored in memory by a BUFFER INTO M WHEN READY WIM (AIM) or YIM instruction after the buffer has disengaged. If the number of characters in the input record was a multiple of the number of characters assembled into each computer word, then the word remaining in the W buffer is either the last group of characters from the input device, if they were not previously transferred to memory by a BUFFER INTO M WHEN READY WIM (AIM) or YIM, or zeros if the last group of characters had been transferred to memory. In either case, it is safe to issue one such instruction after the buffer has disengaged without "hanging up" the computer.

2.49 During output, words come from memory into the WAR where the channel buffer disassembles them into the SCR one 6-bit character at a time. Depending on the characters per word mode specified, the 6-bit characters within the word are output as follows:

Function	Mode
Output one character from bits 0 through 5	One character per word
Output two characters from bits 0 through 5, 6 through 11	Two characters per word
Output three characters from bits 0 through 5, 6 through 11, 12 through 17	Three characters per word
Output four characters from bits 0 through 5, 6 through 11, 12 through 17, 18 through 23	Four characters per word

2.50 As required, the characters are transferred into the One Character Register and output with generated parity. After each character transfer, the word in the WAR is shifted left six bits to be ready for the next transfer. Only those characters needed from each word are used; when required, a new word is brought to the WAR for the next character. For special applications a Time-Multiplexed Channel may be equipped with a 12- or 24-bit One Character Register. The external device which has a character size greater than 6-bits specifies to the channel what its size is, 12- or 24-bits. Standard 6-bit devices are unaffected by the installation of a wider SCR.

2.51 Interlace Registers

2.52 A channel interlace contains two working registers, the Word Count Register (WCR) and the Memory Address Register (MAR). In the set-up sequence -- EOM, EOM, POT -- for an interlaced input/output operation, the POT instruction transmits to the interlace a data word made up of the word count (that is, length) and the starting address of the data block. The 15-bit Word Count Register (WCR) contains the data word count during a data transfer. The number of data words is decremented by one and the new count replaces the old one in the WCR for each word transmitted.

2.53 The count is assembled into the WCR from two places: the least significant 10-bits is from the "POTed" word and the most significant 5-bits is from the "HI COUNT" field of the second EOM. The form of the "POTed" word is:

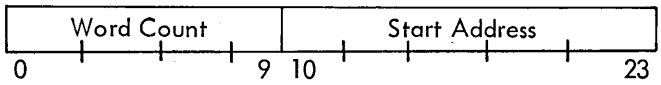

2.54 When the word count is equal to zero, the transmission is complete. During output, this causes a termination; during input, the interlace allows any further data to fill the channel buffer and generates the End-of-Word interrupt, if enabled.

2.55 The Memory Address Register (MAR) contains the starting destination or source address in memory of the transmitted data. The memory locations to or from which data words are to be transmitted enter the MAR at the same time the word count does. During transmission of data, the interlace increments the contents of the MAR after each word as it decrements the contents of the WCR. These two registers provide the interlace control of block transmissions. The high-order 15th address bit comes from the second EOM, also.

2.56 COMMUNICATION CHANNEL PROGRAMMING

2.57 The ENERGIZE OUTPUT M (EOM) used in the Buffer Control mode addresses and connects the specified Channel W (A), Y (B), C, or D, and selects the desired unit address. The detailed instruction format is:

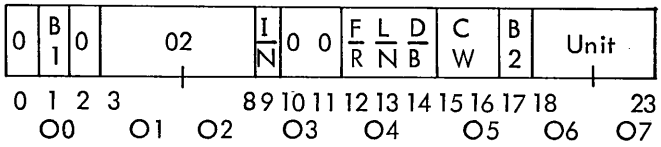

Bit Designation	Octal Position	Octal Value	Function
B1	O0	2	Bit positions 1 and 17 specify the channel to be activated.
B2	O5	1	Channel W (A) is numbered 00, channel Y (B) is 01, channel C is 10, and channel D is 11.
02	O1-2	02	Bit positions 3 through 8 contain 02, the instruction code for EOM.
I/N	O3	4	A 1-bit in position 9 alerts the buffer interlace.
00	O3	0	Bit positions 10 and 11 contain the EOM mode indicator for the Buffer Control mode.
F/R	O4	4	Bit position 12 specifies the direction in which the peripheral device will operate. A "0" specifies the forward direction. A "1" specifies the reverse direction.
L/N	O4	2	Bit position 13 specifies whether the device should be started with a leader as in paper tape. A "0" specifies a start with leader. A "1" specifies a start without leader.
D/B	O4	1	Bit position 14 specifies the mode of character format. A "0" specifies BCD format. A "1" specifies Binary format.
C/W	O5		Bit positions 15 and 16 specify the number of characters to be assembled into, or disassembled from, each transmitted word. One character per word is specified by 00, two by 01, three by 10 and four by 11.
UNIT	O6-7		Bit positions 18 through 23 specify the unit and the function to be performed with that unit.

2.58 STANDARD EOM CHANNEL INSTRUCTIONS

2.59 Several EOM function configurations have standard uses. These have standard, assembler-type mnemonics and are separate instructions.

2.60 ALERT CHANNEL (ALC)

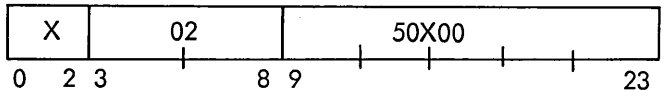

2.61 ALC alerts the channel interlace. This instruction does not disturb the channel buffer in any way. ALC has no effect on W or Y Buffers without interlace. The channel Alerts are:

Mnemonic	Alert Channel	Instruction
ALC 0	W (A)	0 02 50000
ALC1	Y (B)	0 02 50100
ALC 2	C	2 02 50000
ALC 3	D	2 02 50100

2.62 DISCONNECT CHANNEL (DSC)

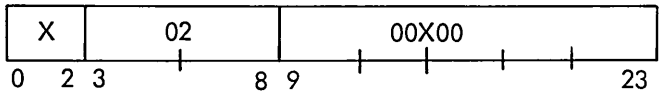

2.63 DSC disconnects the channel. It unconditionally sets the Unit Address Register to 00 regardless of whether the channel is currently addressing a device. This instruction disconnects any device which may be connected to the channel. It also unconditionally makes the channel Ready (Inactive) and clears the Error indicator.

Mnemonic	Disconnect Channel	Instruction
DSC 0	W (A)	0 02 00000
DSC 1	Y (B)	0 02 00100
DSC 2	C	2 02 00000
DSC 3	D	2 02 00100

2.64 ALERT TO STORE ADDRESS FROM CHANNEL (ASC)

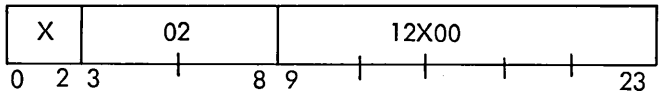

2.65 ASC alerts an interlaced channel so the PIN instruction that follows can store the contents of the Memory Address Register. This instruction does not affect the operation of the channel.

2.66 ASC is always used in conjunction with PIN to determine the current status of a peripheral operation being performed by the selected channel. The two instructions are written together:

```
ASC  n
PIN  m, x
```

2.67 When the program executes these two instructions, the contents of the effective memory location designated by the PIN instruction are:

Bit Positions	Contents
0 through 8	Zero
9 through 23	Contents of channel's Memory Address Register

Mnemonic	Channel	Instruction
ASC 0	W (A)	0 02 12000
ASC 1	Y (B)	0 02 12100
ASC 2	C	2 02 12000
ASC 3	D	2 02 12100

2.68 TERMINATE OUTPUT OF CHANNEL (TOP)

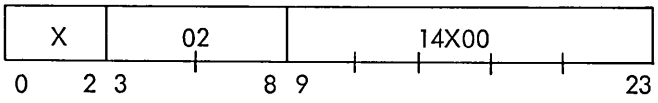

2.69 When the last word of a block enters the channel, TOP terminates channel output. After the execution of this instruction, the following occurs. When the channel buffer delivers the last character to the peripheral device, the buffer disconnects.

2.70 TOP always terminates a non-interlaced channel output operation. It may be used with all communication channels if the particular function selected is terminal function 11 but no further data output is required.

Mnemonic	Terminate Output on Channel	Instruction
TOP 0	W (A)	0 02 14000
TOP 1	Y (B)	0 02 14100
TOP 2	C	2 02 14000
TOP 3	D	2 02 14100

2.71 COMPATIBLE/EXTENDED INPUT/OUTPUT MODES

2.72 The termination of an I/O operation and the interrupts that may be associated with that termination fall into two classes: Compatible and Extended. The choice of one of these two "modes" of input/output operation determines how the system behaves when the termination of an I/O operation occurs.

2.73 Interrupts occurring at the same level (e.g., location 30, 31, etc.) can have difference names (e.g., Count Equal Zero and End-of-Word). These names reflect the different I/O mode in operation when the interrupt occurs. The differences include the timing of interrupt occurrence relative to the I/O operation and type of interrupt requested.

2.74 The Compatible mode of operation for channels W (A), Y (B), C, D is directly compatible with the SDS 900 Computer series modes of I/O operation. The types of interrupts that can be requested are the End-of-Word and End-of-Transmission interrupts.

2.75 The Extended mode for all channels expands the I/O capabilities to include the "terminal functions" discussed below. The types of interrupts that can be requested are the Count Equal Zero and End-of-Record interrupts.

2.76 The I/O mode is selected in the Input/Output EOM via bit 12, the Interrupt Arm bit. A 0-bit makes the system operate in the Compatible mode; a 1-bit sets the system in the Extended mode.

2.77 In particular, the Interrupt Arm (IA) bit determines whether any of the Extended functions operate; that is, a "0" in IA means that the other Extended mode controls, bits 13, 14, 15 and 16, have no effect.

2.78 INPUT/OUTPUT CLASS EOM

2.79 The Input/Output EOM selects the I/O operation mode. When the Extended mode is selected, this EOM also selects (arms) which interrupts are to be operational and selects the desired terminal function. This EOM applies to channels W (A), Y (B), C, and D.

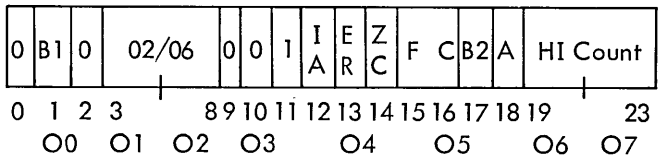

Bit Designation	Octal Position	Octal Value	Function
0			Bit positions 0 and 2 are not used with this EOM.
B1 B2	O0 O5	2 1	Bit positions 1 and 17 specify the channel.
02/06	O1-O2	02	Bit positions 3 through 8 contain 02/06, the instruction code for EOM.
01	O3	1	Bit positions 10 and 11 contain the EOM indicator for the Input/Output control mode.
IA	O4	4	Bit position 12 selects the mode of I/O operation. A "0" specifies the Compatible mode. The operation of bits 13, 14, 15, and 16 are disallowed. Channels W (A), Y (B), C and D operate in this mode which is completely SDS 900 series compatible. If interrupts are required, the user enables the Interrupt System, thus enabling and arming the End-of-Word and End-of-Transmission interrupts. A "1" specifies the Extended mode. All channels can operate in this mode. This allows the use of bits 13, 14, 15, and 16. If interrupts are required, the user arms the associated ones by placing 1-bit in bits 13 and/or 14. The "terminal function" to be used is selected via bits 15 and 16.
ER		2	Bit position 13 controls the arming of the End-of-Record interrupt. A 1-bit arms the interrupt. A 0-bit disarms the interrupt.
ZC		1	Bit position 14 controls the arming of the Zero Word Count interrupt. A 1-bit arms the interrupt. A 0-bit disarms the interrupt.
FC	O5		Bit positions 15 and 16 specify the terminal condition function to be performed with the transmission.
A			Bit position 18 is the high-order address bit.
HI Count			Bit positions 19 through 23 contain the most significant four bits of the 15-bit word count. These positions specify a word count greater than 1023.

NOTE

A 1-bit in 13 and/or 14 does the following:

1. Arms that interrupt during this complete I/O operation; disconnecting this channel disarms the interrupt.

2. Once armed by bits 13 and/or 14, the interrupt can be enabled or disabled by the Enable/Disable feature of the Interrupt System. If a channel generates an extended mode I/O interrupt while the system is disabled, the designated interrupt level goes to the Waiting state. When the program again enables the interrupt system, the interrupt goes to the Active state when its priority allows.

2.80 TERMINAL FUNCTIONS; EXTENDED MODE

2.81 A 2-bit function code in the Input/Output EOM controls the termination of input/output operation in the extended mode. These functions are described below with the letter C representing the specified word count of the transmission.

2.82 INPUT/OUTPUT OF A RECORD AND DISCONNECT (IORD)

2.83 Input

2.84 Read C words. If C equals zero before the End-of-Record is detected, the rest of the record is ignored. At the End-of-R cord, the peripheral device is disconnected and the channel becomes inactive.

2.85 Output

2.86 Write C words. When C equals zero, output is terminated (i.e., the device is signaled that the last characters have been transmitted). When the peripheral device has generated the end of record and, if necessary, checked the validity of the record, it sends an End-of-Record response to the channel buffer. When received by the buffer, the End-of-Record signal generates an End-of-Record interrupt (if armed) and disconnects the channel.

2.87 The line printer generates the End-of-Record response when it completes the printing of a line. If the printer encounters any print errors or faults, it sends a signal to the channel that sets the channel error indicator; this can occur since the printer has not disconnected from the channel. The IORD is useful when the program is to print several lines and the program is not otherwise to use the channel between lines. When the printer completes each line, it causes an End-of-Record interrupt (assumed to be armed), notifying the program that it can immediately transmit the next paper control instruction and the next line image.

2.88 The unbuffered card punch operates similarly. It generates the End-of-Record response after punching each row. If any faults occur during the punching of the entire card, the card punch sends a signal to the channel that sets the channel error indicator; this occurs after punching the last row (row 9).

NOTE

A program should not use IORD with devices that do not have End-of-Record conditions on input (e.g., typewriter) or generate End-of-Record responses upon output termination, (e.g., devices such as the paper tape punch and typewriter). These devices do terminate output but give the program no indication when they receive the last characters.

2.89 INPUT/OUTPUT UNTIL SIGNAL THEN DISCONNECT (IOSD)

2.90 Input

2.91 Read C words. When C equals zero or when the End-of-Record is encountered, the device is disconnected and the channel becomes inactive. If the channel disconnects because of a zero count, an EOR interrupt (if armed) will be generated in addition to the count equal zero interrupt. If both are armed, C=0 will occur first.

2.92 Output

2.93 Write C words. When C equals zero and when the last character has been transmitted, the channel disconnects the device and becomes inactive. If an End-of-Record signal is received before the count reaches zero, the channel will disconnect immediately.

NOTE

The IOSD is designed for use on devices which are normally operated on the basis of the word count only. Typewriters and paper tape devices are of this type, as are the printer and card punch when the user does not wish to stay connected until the operation is complete.

2.94 INPUT/OUTPUT OF A RECORD AND PROCEED (IORP)

2.95 Input

2.96 Read C words. If the channel counts C down to zero before the peripheral device encounters the End-of-Record (EOR), the channel ignores the rest of the record (to the End-of-Record). When the peripheral device sends the End-of-Record signal to the channel, the channel sets its End-of-Record Indicator; this signal sets the End-of-Record interrupt (if armed). The channel does not disconnect. The channel is now in an "Inter-record" condition.

2.97 When the peripheral device is magnetic tape, the tape continues to move when the tape handler encounters the End-of-Record. The End-of-Record occurs when the tape read-heads encounter tape gap; this also causes a Tape Gap signal to "come high". If the program executes a new read tape or scan tape EOM during the inter-gap time (approximately one millisecond while the Tape Gap signal is high), the tape remains in motion and proceeds to read or scan the next record.

If the program executes no such EOM before the Tape Gap signal drops, the channel disconnects and the tape comes to a stop. No additional interrupt occurs. This is the only condition that causes a channel to disconnect automatically.

2.98 All other input devices remain connected until the program takes further action. The paper tape reader remains in motion; the program should issue a "disconnect channel" instruction if the program is not reading any more tape. To proceed after the End-of-Record occurs, the program first executes a Buffer Control mode EOM to re-initialize the Channel Unit Address Register and then reloads the interlace portion of the channel (the program can alert the Interlace via the Buffer Control EOM). Otherwise, the channel immediately terminates any attempt to use its interlace portion since the channel is aware that it is still active and in the End-of-Record condition. When the program continues from an Inter-record condition, the program should use an extended mode terminal function. An IORP should not be used to read devices which do not have EOR signals (e.g., the typewriter and paper tape punch).

2.99 Output

2.100 Write C words. When the channel interlace counts C down to zero, the Interlace notifies the channel buffer that it has received the last word that is to be output; when the buffer outputs this last word, it sends a signal to the connected peripheral device indicating that the device has the last word now. When the peripheral device "receives, outputs and checks the validity of" this last word, it sends an End-of-Record response to the channel buffer. When received by the buffer, the End-of-Record signal generates an End-of-Record interrupt (if armed) and sets the Inter-record indicator; the channel does not disconnect.

2.101 When the peripheral device is magnetic tape, the tape continues to move after it signals End-of-Record. As in reading tape, the signal causes the Tape Gap signal to come high. If the program executes a new write tape or erase tape EOM during the inter-gap time (approximately one millisecond), the tape remains in motion and proceeds to write or erase a new record. If the program executes no such EOM before the Tape Gap signal drops, the channel disconnects and the tape comes to a stop. No interrupt occurs at this time. This is the only condition which causes a channel to disconnect automatically.

2.102 To proceed after the End-of-Record occurs, the program first executes a Buffer Control mode EOM to re-initialize the Channel Unit Address Register and then reloads the interlace portion of the channel (the program can alert the Interlace via the Buffer Control EOM). Otherwise, the channel immediately terminates any attempt to use its interlace portion, since the channel is aware that it is still active and in the End-of-Record condition. When the program continues from an Inter-record condition, the program should use an extended mode terminal function.

2.103 A program should not use IORP with devices that do not generate End-of-Record responses upon output termination; such devices are paper tape and typewriter. These devices do terminate output but give the program no indication when they receive the last characters.

2.104 The IORP should also not be used with the printer and card punch since these devices expect the channel to disconnect after they send EOR.

2.105 INPUT/OUTPUT UNTIL SIGNAL THEN PROCEED (IOSP)

2.106 Input

2.107 Read C words. If the channel counts C down to zero before the peripheral device encounters the End-to-Record, the channel generates a Count Equals Zero interrupt (if armed). The program should reload the interlace portion of the channel to continue reading the record. As far as the peripheral device knows, nothing happens at this time. Failure to reload the Interlace before the peripheral device sends enough characters to overfill the channel buffer causes a rate error; this sets the channel error indicator.

2.108 When the peripheral device encounters the End-of-Record, IOSP operates identically like the IORP command.

2.109 Output

2.110 Write C words. When the channel counts C down to zero, the channel generates a Count Equals Zero interrupt (if armed); the channel does not terminate output. The program should reload the interlace portion of the channel to continue writing in the same record. Failure to reload the Interlace before the buffer transmits all of the characters in its registers and before the peripheral device requests the next character from the buffer results in a rate error; this sets the channel error indicator.

2.111 If the program executes a TERMINATE OUTPUT (TOP) instruction after the channel has counted C down to zero, the channel terminates the output and operates identically like the IORP from this point on.

2.112 CHANNEL AND DEVICE SKS

2.113 The Channel and Device Test mode SKIP IF SIGNAL NOT SET (SKS) tests the indicators in a channel as well as devices attached to it. To test the channel, use unit address 00. The instruction format is:

2.114 CHANNEL TESTS

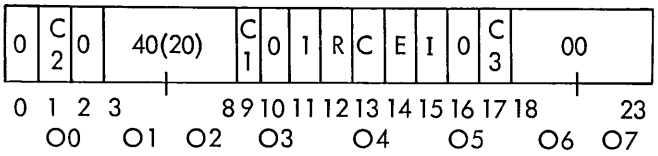

Bit Designation	Octal Position	Octal Value	Function
40(20)	O1-O2	40(20)	Bit positions 3 through 8 contain 40(20), the SKS instruction code.
01	O3	1	Bit positions 10 and 11 contain the mode selection.
C1 C2 C3	O3 O0 O5	4 2 1	Bits C1, C2, C3 used as an octal address, specify the channel to be tested. Channel W (A) is 0, channel Y (B) is 1, and so on.
R			Test for ready. A 1-bit selects the test. Skip if Ready or Inactive.
C	O4	2	Test if indicator for Word Count Equal to Zero is set. A 1-bit selects the test. Skip if word count zero.
E		1	Test for error indicator reset. A 1-bit selects the test. Skip if no error.
I	O5	4	Test for Inter-record condition.
00			Bit positions 18 through 23 are zero to specify a channel test. Each of these tests causes a skip when the test condition is true.

2.115 STANDARD SKS INSTRUCTIONS

2.116 Several SKS function configurations have standard uses. These have standard, assembler-type mnemonics and are always used as shown.

2.117 CHANNEL ACTIVE TEST (CAT)

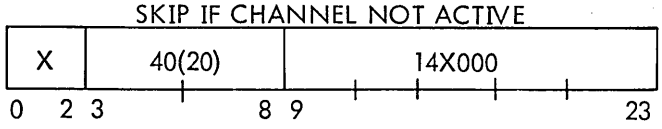

2.118 If the channel is ready to accept a new input/output instruction, the computer skips the next instruction in sequence and executes the following instruction. If the channel is active, or in the process of disconnecting a peripheral unit, the computer executes the next instruction in sequence.

Mnemonic	Channel Active Test	Instruction
CAT 0	W (A)	0 40(20) 14000
CAT 1	Y (B)	0 40(20) 14100
CAT 2	C	2 40(20) 14000
CAT 3	D	2 40(20) 14100

2.119 The following SDS 900 series compatible instructions make the identical test as the above instructions on channels W and Y;

BRTW	0 40 21000	W BUFFER READY TEST
BRTY	0 40 22000	Y BUFFER READY TEST

2.120 The indicator that CAT tests is reset only by the next EOM that connects and alerts the same channel.

2.121 CHANNEL ERROR TEST (CET)

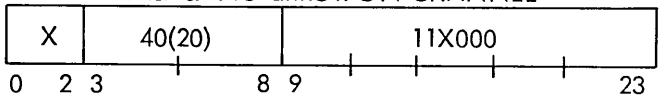

2.122 CET tests the error indicator in the channel for being in the set condition. If the error indicator has not been set, the computer skips the next instruction in sequence and executes the following instruction. If the error indicator has been set, the computer executes the next instruction in sequence.

Mnemonic	Channel Error Test	Instruction
CET 0	W (A)	0 40(20) 11000
CET 1	Y (B)	0 40(20) 11100
CET 2	C	2 40(20) 11000
CET 3	D	2 40(20) 11100

2.123 The following SDS 900 series compatible instructions make the identical test of channels W and Y:

BETY	0 40 20020	Y BUFFER ERROR TEST
BETW	0 40 20010	W BUFFER ERROR TEST

2.124 The indicator that CET tests is reset only by the next EOM that connects and alerts the same channel.

2.125 CHANNEL ZERO COUNT TEST (CZT)

SKIP IF CHANNEL WORD COUNT IS ZERO

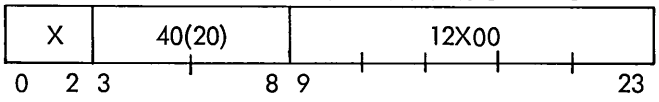

2.126 CZT tests whether the contents of the Word Count Register in the channel have been reduced to zero. If the contents of WCR are zero, the computer skips the next instruction in sequence and executes the following instruction. If the contents of the WCR are non-zero, the computer executes the next instruction in sequence.

Mnemonic	Channel Zero Count Test	Instruction
CZT 0	W (A)	0 40(20) 12000
CZT 1	Y (B)	0 40(20) 12100
CZT 2	C	2 40(20) 12000
CZT 3	D	2 40(20) 12100

2.127 The indicator that CZT tests is reset only by a POT instruction to set up the word count and data address in the same channel.

2.128 CHANNEL INTER-RECORD TEST (CIT)

SKIP IF INTER-RECORD INDICATOR IS SET

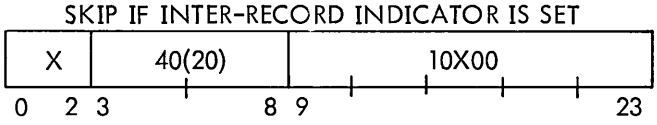

2.129 CIT tests the Inter-record indicator in the selected channel. If the Inter-record indicator is set, the computer skips the next instruction in sequence and executes the following instruction. If the indicator is reset, the computer executes the next instruction in sequence.

Mnemonic	Channel Active Test	Instruction
CIT 0	W (A)	0 40(20) 10400
CIT 1	Y (B)	0 40(20) 10500
CIT 2	C	2 40(20) 10400
CIT 3	D	2 40(20) 10500

2.130 The Inter-record indicator is set only during extended mode operation when using a Proceed Function; the indicator is set for an inter-record or zero count condition. The indicator is reset by the next alert and connect EOM.

2.131 DEVICE TESTS

2.132 The SKIP IF SIGNAL NOT SET (SKS) below, used in the Channel and Device Test mode, tests the condition of the peripheral devices in the system directly. The peripheral device sections contain the individual instruction descriptions.

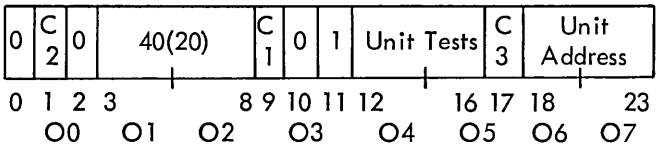

Bit Designation	Octal Position	Octal Value	Function
C1	O3	4	Bit positions 9, 1, and 17 are used as an octal digit to specify the channel.
C2	O0	2	Channel W (A) is 0, channel Y (B) is 1, and so on.
C3	O5	1	
40(20)	O1-O2	40(20)	Bit positions 3 through 8 contain the SKS instruction code.
01	O3	1	Bit positions 10 and 11 contain the mode selection.
Unit Tests	O4-O5		Bit positions 12 through 16 select the particular test and are system dependent.
Unit Address	O6-O7		Bit positions 18 through 23 specify the unit address.

2.133 SINGLE-WORD DATA TRANSFER VIA CHANNELS W (A) AND Y

2.134 INSTRUCTIONS

2.135 Channels W (A) and Y can be programmed as single-word input/output buffers. Data transfer is performed under direct program control or with the aid of the interrupt system. Interlace is not used with these instructions.

2.136 The following two instructions perform data transfer using channel W.

2.137 MEMORY INTO CHANNEL W WHEN EMPTY (MIW)

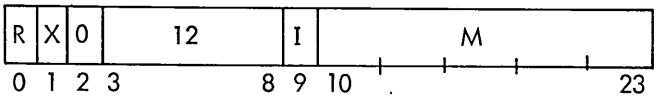

2.138 MIW transfers the contents of the effective memory location into the channel W word buffer. If necessary, the central processor "hangs up" until the buffer is empty and ready to accept the data word.

2.139 The W buffer must be connected to the desired peripheral device by a previous "connect" EOM instruction that selects the buffer, the unit address, and all appropriate control functions.

2.140 CHANNEL W INTO MEMORY WHEN FULL (WIM)

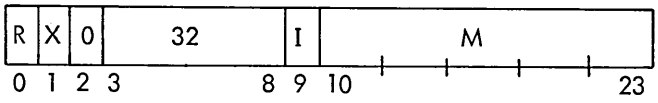

2.141 WIM transfers contents of the channel W word buffer into effective memory location. If necessary, the central processor "hangs up" until the buffer is full and ready to deliver the data word.

2.142 MEMORY INTO CHANNEL Y WHEN EMPTY (MIY)

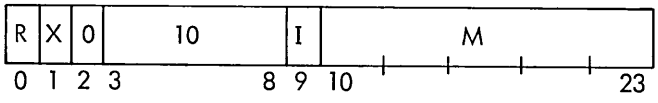

2.143 MIY transfers the contents of the effective memory location into the channel Y word buffer. If necessary, the central processor "hangs up" until the buffer is empty and ready to accept the data word.

2.144 CHANNEL Y INTO MEMORY WHEN FULL (YIM)

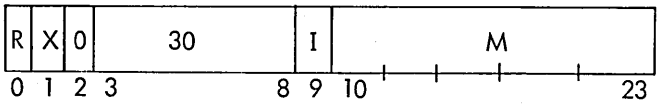

2.145 YIM transfers the contents of the channel Y word buffer into the effective memory location. If necessary, the central processor hangs up" until the buffer is full and ready to deliver the data word.

2.146 MEMORY INTO CHANNEL A WHEN EMPTY (MIA)

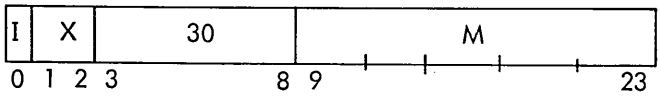

2.147 The contents of the effective memory location are transferred into the channel A word buffer. The central processor "hangs up" until the buffer is empty and ready to accept the data word.

2.148 CHANNEL A INTO MEMORY WHEN FULL (AIM)

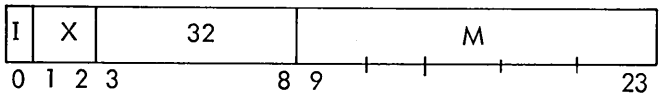

2.149 The contents of the channel A word buffer are transferred into the effective memory location. The central processor "hangs up" until the buffer is full and ready to deliver the data word.

2.150 SINGLE-WORD OPERATIONS

2.151 The single-word buffer operations are used in two ways. Data words transfer between the channel and memory under direct program control. The "connect" EOM and the input or output channel instruction are in sequence and the computer "hangs up" until the buffer is ready to perform the transfer. This delay is usually due to buffer tie-up while the buffer is actively transmitting or receiving the previously requested data word.

2.152 Use of the priority interrupt system eliminates the tie-up of the central processor. The interrupt system allows the program to connect the device to be used in the transfer, to enable the interrupt, and then to continue processing in the main program. When the buffer is ready to receive from, or transfer to, memory, the End-of-Word interrupt to the corresponding interrupt location notifies the program that the buffer is Ready. A service routine entered via a BRANCH AND MARK PLACE (BRM) instruction in the appropriate interrupt

location processes the interrupt. This routine contains the instruction (MIW or WIM, for example) that can execute immediately without computer tie-up.

2.153 During single-word operations, a parity error or incorrect timing error sets the buffer error indication in the channel. The incorrect timing error occurs when characters enter the buffer during input before the removal of the previous word; during output, buffer error indication occurs if characters are needed for output before the buffer receives the next word. The transmission does not terminate upon detection of any of these errors.

2.154 The interrupt system can detect an End-of-Record termination. During output, use of TERMINATE OUTPUT (TOP) after the final MIW (MIY) causes an interrupt to the appropriate End-of-Transmission location when that final data word has been processed by the buffer. This interrupt takes the place of the End-of-Word interrupt; the End-of-Transmission condition inhibits the End-of-Word interrupt. During input, the End-of-Transmission interrupt is sent to the End-of-Transmission location when the End-of-Record is detected. During input from devices which do not generate an End-of-Record, an EOM disconnects (DSC) the channel to terminate the transmission. This termination generates no End-of-Transmission interrupt.

SECTION III
THEORY OF OPERATION

3.1 GENERAL

3.2 The TMCC communicates with an external system or device by means of a shift register utilizing 6, 12, or 24-bit characters plus a parity bit. The maximum character size depends on the optional registers that may be installed. In TMCC Models 922XX, the character length is fixed at 6, 12, or 24 bits and can not be varied from one size to another. However, TMCC Models 932XX having the larger character length options may be switched from one size to another under control of the external system. The length is selected through activation of one of the character size control lines. External devices may activate these lines as necessary but if none are activated the TMCC assumes 6-bit characters. The rate of information transfer is determined by a clock signal from the external device. For both input and output, the TMCC slaves itself to the clock frequency of the device up to the TMM maximum data rate of two machine cycles per character.

3.3 The TMCC communicates with the computer by means of a 24-bit shift register which transfers words, an octal group at a time, between the TMCC and the computer C Register. The TMCC thus has two registers for data storage. These provide the means to assemble input characters into words or disassemble words into output characters. The number of characters per word is under program control but is limited to a maximum of four 6-bit characters, two 12-bit characters, or one 24-bit character.

3.4 Information may be input or output by executing an instruction for each word (channels W (A), or Y, only). The instruction may be given in advance of the time it is needed, in which case the computer remains idle until the channel is ready. Or the computer interrupt system may be employed so that the channel can call for an instruction when it is ready to use it. This allows the computer to continue with other computations when not actually engaged in the input/output (I/O) process.

3.5 An optional interlace feature may be installed in the TMCC to facilitate I/O operations with fewer instructions. The interlace logic allows a program to designate to the TMCC how many words are to be transferred and the memory location of the first word. Then, without further instructions, the TMCC can assemble or disassemble the number of words specified and time-share with the computer each time it is ready to transfer a word to or from memory. The I/O process may thus be interlaced with computation or with similar I/O operations on other channels.

3.6 Figure 3-1 is a block diagram of the TMCC. As indicated on the figure, the principal parts of the TMCC are the Character Buffer, Word Assembly Register, Unit Address Register, Word Counter, and Address Counter.

3.7 CHARACTER BUFFER

3.8 Depending on the option, the Character Buffer is a single character storage register of 6, 12, or 24 bits. It is implemented with S-R type flip-flops connected in a series-parallel manner so shifting takes place in octal groups (i.e. three bits in parallel). Transfer of data between the Character Buffer and an external system is entirely parallel for the whole character whether it be input or output.

3.9 WORD ASSEMBLY REGISTER

3.10 This register is also connected in series-parallel to allow shifting in octal groups. It is composed of three parallel registers of eleven flip-flops each. The register includes twenty-four flip-flops to store a complete word plus additional flip-flops on the ends of each series string to allow for timing considerations. The Word Assembly Register is implemented with flip-flops connected in such a manner that continuous recirculation occurs.

3.11 UNIT ADDRESS REGISTER

3.12 The 6-bit address code to select a specific peripheral device is set-up in the Unit Address Register. The register is composed of five flip-flops whose outputs are sent to the peripheral unit for decoding. A sixth flip-flop, associated with the Unit Address Register, is also set-up at the same time to signal the external device whether an input or an output is to take place.

3.13 WORD COUNTER

3.14 The Word Counter is part of the optional interlace equipment. It is a fifteen stage flip-flop counter used to store the number of words to be transferred during an interlaced I/O operation. With each word transfer, the counter is decremented by "one". (Actually, the complement of the count is incremented.)

3.15 ADDRESS COUNTER

3.16 This counter is also part of the optional interlace feature. Its purpose is to store the address of the d memory location currently being accessed. Each time a word is taken from or sent to memory, the Address

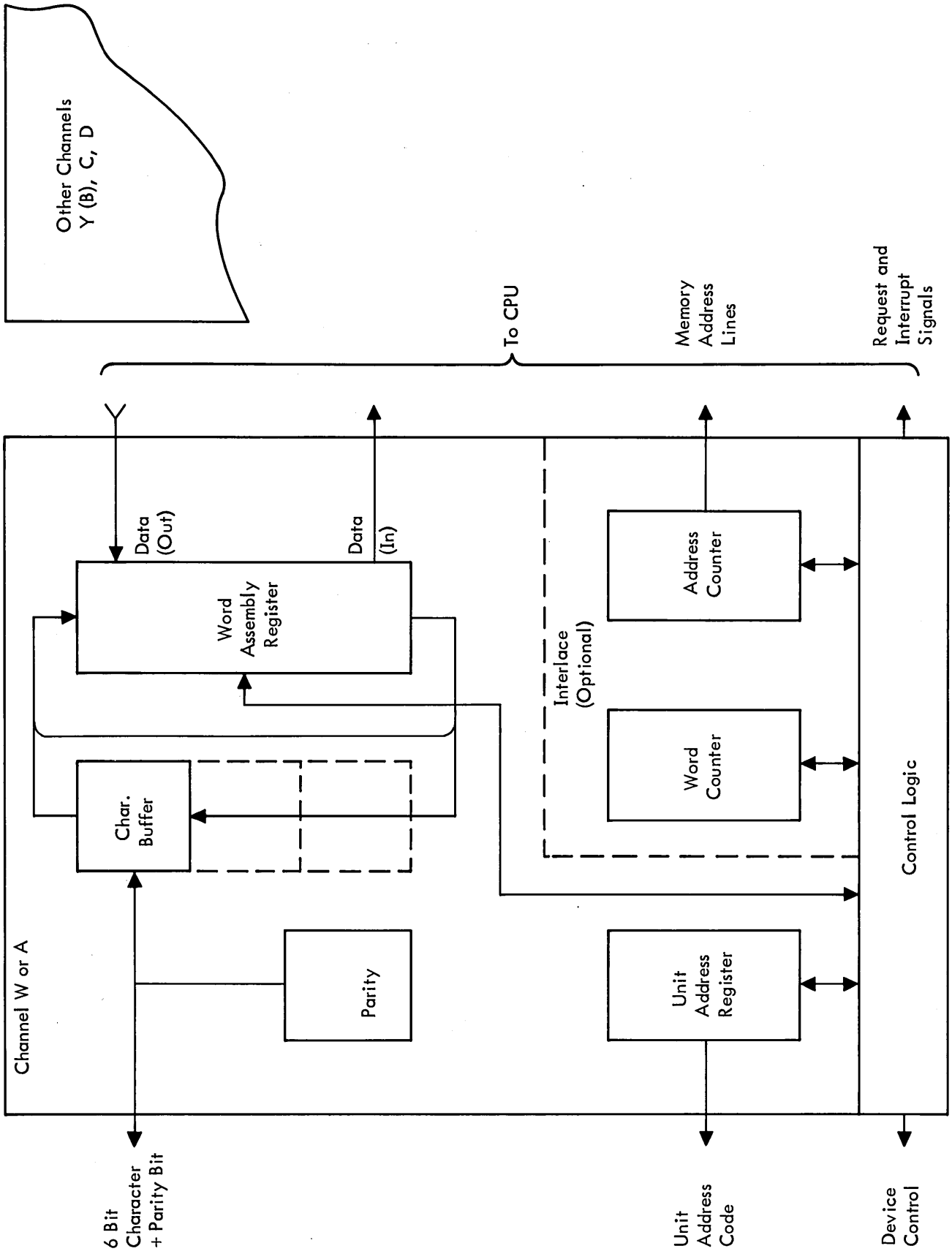

Figure 3-1. Time Multiplexed Communication Channel With Interlace, Block Diagram

Counter is incremented by "one" to prepare for locating the next word.

3.17 INPUT PROCESS

3.18 A brief outline of a non-interlaced input process follows. The TMCC is initialized by an EOM instruction to set-up the address code of the peripheral device, to designate input or output, and specify the number of characters per word. When the address is decoded by a peripheral device, the device is activated and begins sending clock signals and data to the channel.

3.19 Input clocks are synchronized with TMCC timing by clock counter flip-flops which detect the peripheral device clock, transfer the input data to the Character Buffer and cause the Word Assembly Register to circulate through the Character Buffer. Ordinarily the Word Assembly Register recirculates on itself but as each new input character is ready it circulates through the Character Buffer for one machine cycle to pick up the new character. A machine cycle is defined as eleven computer clock pulse periods.

3.20 As each character is clocked in, the character counter (W7 W8) is decremented until the count reaches zero, signaling that a complete word has been formed. Depending on the particular channel (TMCC W (A) or Y) a WIM, AIM, or YIM instruction may be used to transfer the word from the TMCC to memory. When the instruction is executed, a word is shifted in octal groups from the Word Assembly Register to the computer C Register and then stored in the memory location specified by the effective address of the WIM, AIM, or YIM instruction.

3.21 To prepare for the next word, the Character Counter is reset to its original count which was designated by the initializing EOM instruction. Storage of the original count is accomplished by utilizing excess positions of the Word Assembly Register.

3.22 The input process may be terminated by another EOM instruction or by detection of an externally applied halt condition.

3.23 OUTPUT PROCESS

3.24 A non-interlaced output process is started in the same way that an input operation is initialized. A MIW (MIY or MIA) instruction can then be used to transfer words from memory to the Word Assembly Register via the computer C Register.

3.25 Each time the external device sends a clock signal to the TMCC, it is detected by the Clock Counter. At a certain point in the counter sequence, the device extracts information from the Character Buffer. At the end of the counter sequence, the Word Assembly Register recirculates through the buffer for one machine cycle. At the conclusion of the cycle, a new character is available in the Character Buffer awaiting the next clock. The Clock Counter also decrements the Character Counter. When it is decremented to zero, the last character of a word is in the buffer. By this time another MIW (MIY or MIA) instruction should be executed; or the instruction may be called for through the interrupt system. As with input, the Character Counter is reloaded between words from the Word Assembly Register.

3.26 The output operation is concluded by a Terminate Output EOM instruction.

3.27 Parity

3.28 During input, a parity flip-flop accepts the input parity bit and checks the character for odd parity. The same flip-flop is also used to generate the parity bit for output characters.

3.29 TMCC AND INTERLACE CONFIGURATION

3.30 The theory of operation contained in this manual is applicable to all models of the Time-Multiplexed Communication Channels for the 925/930/9300 Computers. The operation is for the most part identical for all models. Those differences that do exist, however, are covered in the explanation where appropriate.

3.31 DETAILED DESCRIPTION

3.32 Many portions of the TMCC logic are common to both input and output operations. Other portions of the logic are specifically related to input only, output only, or interlace only. The following logic description begins with the common logic functions.

3.33 Subsequent to the logic descriptions are the Glossary of Logic Term and the Logic Equations.

3.34 PULSE COUNTER

3.35 The pulse counter consists of flip-flops Qr1, Qr2, Qr3, and Qr4. These flip-flops perform the same function for the TMCC that the pulse counter, Q1 through Q6, does for the central processor (CPU). The counter is included in the TMCC in addition to the counter in the CPU in order to avoid excessive delays and loading that would occur if all timing signals were obtained directly from the CPU. The Pulse Counter defines the pulse times, T8, T7, T6, T5, T4, T3, T2, T1 T0, Tr, and Tp needed for timing of all processes within the unit. Refer to table 3-1 for the Pulse Counter Truth Table.

Table 3-1. Pulse Counter Truth Table

	Qr1	Qr2	Qr3	Qr4
Tp	0	0	0	0
T8	1	0	0	0
T7	1	0	0	1
T6	1	1	1	1
T5	0	1	1	1
T4	0	0	1	1
T3	0	0	1	0
T2	1	0	1	0
T1	1	1	1	0
T0	0	1	1	0
Tr	0	0	0	0
Tp	0	0	0	0

3.36 It is logically impossible to set Qr2, Qr3, and Qr4 unless Qr1 has been previously set. Therefore, without the additional set signal provided by Tpc, the counter would soon reach the reset state of time Tr + Tp and then stop counting. However, Tpc, the Tp signal from the CPU, is used to advance the TMCC pulse counter from Tp to T8. Thus, both counters advance to T8 at the same time and both remain in synchronism. An examination of the logic also indicates that the two pulse counters will synchronize regardless of the turn-on state.

$$sQr1 = Tpc + \overline{Qr2}\ Qr3\ \overline{Qr4}$$
$$rQr1 = Qr2$$

$$sQr2 = Qr1\ \overline{Qr2}\ Qr4\ (Qr4 + T0) + Qr1\ Qr3$$
$$rQr2 = \overline{Qr1}$$

$$sQr3 = Qr1\ Qr4$$
$$rQr3 = Qr3\ \overline{Qr4}\ (Qr4 + T0)$$

$$sQr4 = Qr1\ \overline{Qr3}$$
$$rQr4 = \overline{Qr1}\ \overline{Qr2}$$

Only those pulse times or combinations of pulse times that are need for timing in the TMCC are decoded. For example:

$$T0 = \overline{Qr1}\ Qr2\ \overline{Qr4}$$

$$T6 - T0 = Qr3$$

3.37 In examining the pulse counter and the T0 decoding logic, it appears that the term (Qr4 + T0), as used on the inputs of Qr2 and Qr3, contains redundant logic. This is a result of logic mechanization and the redundant terms are not significant to the counter operation.

3.38 A TMCC pulse counter is associated with each W and C channel. The Y and D channels share the same pulse counters as the W and C channels, respectively. Other logic is shared in a similar manner by two channels and will be noted as each case arises.

3.39 INPUT/OUTPUT PROCESSING

3.40 When an EOM instruction of the form, EOM-0XXXX or EOM4XXXX, is executed to start an input or output process, a Buffer Control Signal, Buc, produces a clear signal, Wc, and a set signal, Ws. These two signals, Wc and Ws, permit initialization for the input/output operation. The Unit Address and the Character Count are set up from the C-Register. The registers are first cleared by Wc and then set by Ws. Refer to figure 3-2.

$$Buc = Eom\ \overline{C10}\ \overline{C11}\ \overline{C1}\ *$$

$$Wc = Buc\ \overline{C17}\ (T6 + T5) + St + \ldots$$

$$Ws = Buc\ \overline{C17}\ (T3 - T0)$$

*C1 is used in place of $\overline{C1}$ for Channels C and D. Similarly, C17 and $\overline{C17}$ distinguish between the W and Y channels, or between the C and D channels.

(T6 + T5) and (T3 - T0) are decoded timing signals from the pulse counter. Frequent use is made of such pulse times throughout the manual without further explanation. The term $\overline{C17}$ distinguishes enabling of the W channel rather than the Y channel. The combination of terms which make up the input of Buc indicate that the computer is in phase (Ø) 5 of the execution of an EOM Buffer Control instruction. The term, St, is produced by the start switch which may also be used to reset the TMCC. The register logic involved in the clear and set sequencing is:

$$sW14 = Ws\ C23$$
$$rW14 = Wc$$
$$sW11 = Ws\ C20$$
$$rW11 = Wc$$
$$sW10 = Ws\ C19 + \ldots$$
$$rW10 = Wc$$

Unit Address Register

5-bits provide 31 addressing codes and a disconnect code.

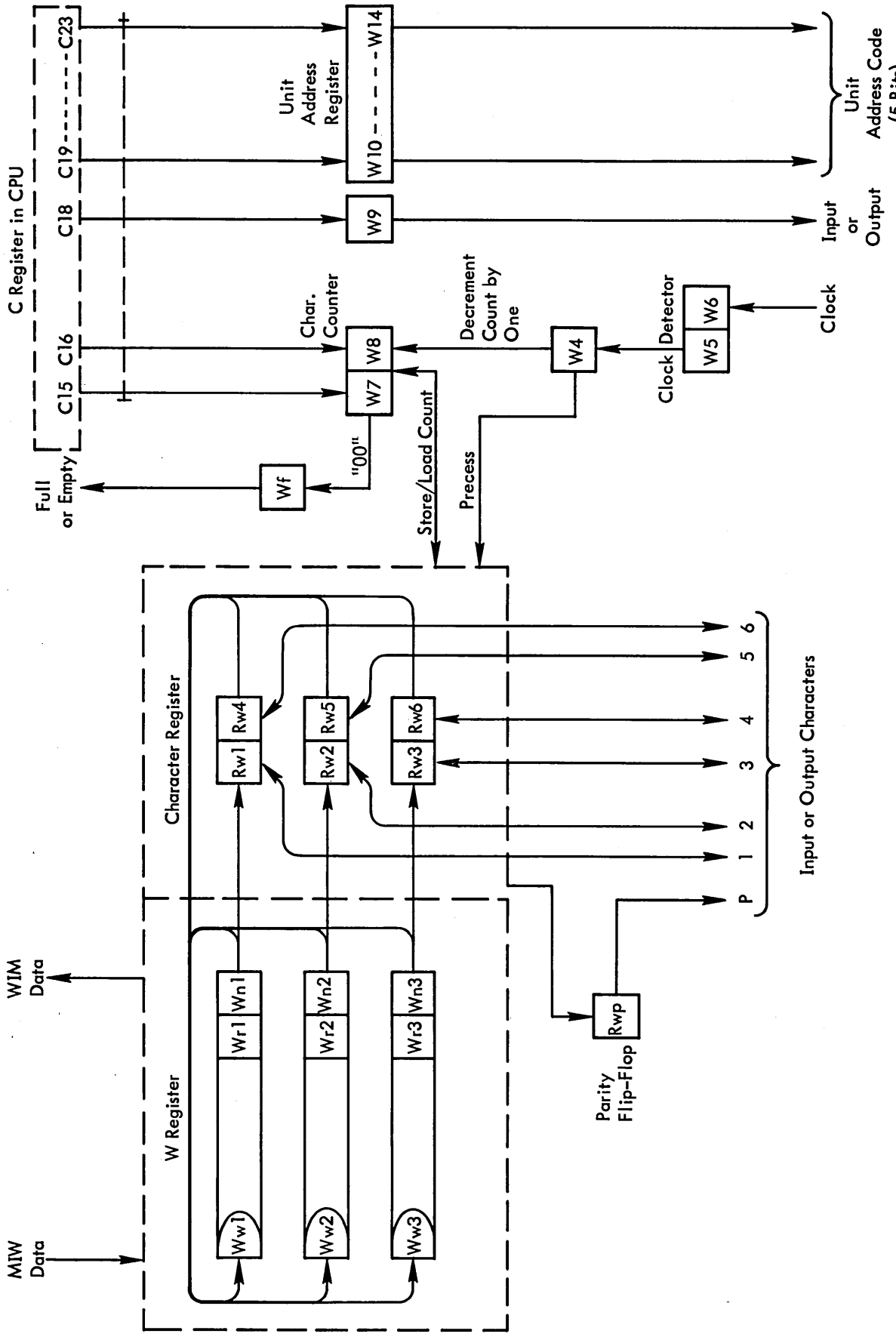

Figure 3-2. TMCC Information Flow Diagram, Input/Output (6 bit)

sW9 = Ws C18 W9 = 1 for output

rW9 = Wc W9 = 0 for input

sW8 = Ws C16 + . . .

rW8 = Wc + . . .

sW7 = Ws C15 + . . .

rW7 = Wc + . . .

Character Counter

W7	W8	Characters/Word
1	1	4
1	0	3
0	1	2
0	0	1

3.41 At the end of the Buc type instruction and during the last pulse time (T0) that Ws is on, the flip-flop, W4, is set on for three pulse times.

$$sW4 = Ws\ T0 + \ldots$$

$$rW4 = W4\ T8 + \ldots$$

During this time, W4 allows the contents of the character counter to be copied into the W-Register. The bit in W7 goes into Ww1 and the bit in W8 goes into Ww2.

$$Ww1 = W4\ W7\ \overline{(T7 - T0)} + \ldots$$

$$Ww2 = W4\ W8\ \overline{(T7 - T0)} + \ldots$$

During this period, $\overline{W4}$ or timing singals inhibit the other inputs to the W-Register.

3.42 This process provides a means for the TMCC to remember the initial character count while using flip-flops W7 and W8 to perform the actual count-down of the characters as each word is assembled on input or disassembled on output. As a word is processed, the original count is reloaded into the counter to get ready for the next word.

$$sW8 = Wxx\ Wn2\ \overline{(T7 - T0)}\ \overline{W4}$$

$$sW7 = Wxx\ Wn1\ \overline{(T7 - T0)}\ \overline{W4}$$

The term Wxx is true during the transmission of a word being processed. Thus, in addition to its normal word handling functions, the W-Register provides storage of the character count for W7 and W8.

3.43 W-Register

3.44 The W-Register is a one word recirculating flip-flop register with additional flip-flops at the read and write ends. The Write input signals to the first flip-flops of the register are designated Ww-, the intermediate Read flip-flops are designated Wr- and these drive the last flip-flops which are designated Wn-. The n represents now.

3.45 During normal recirculation, the outputs of the n flip-flops are fed to the w inputs, which, in turn, feed the remaining serial shift circuits. There are a total of eleven stages in a recirculating loop, one for each pulse time of a machine cycle. Three recirculating loops are required to hold a 24-bit word. The first recirculating loop holds only the most significant bits of each of the eight octal digits in a word. The second recirculating loop holds the middle bits of the eight octals. The third recirculating loop holds the least significant bits of each of the eight octals. If the octal word 07030407 (000 111 000 011 000 100 000 111) were being held in the register, its bits at pulse time Tp would appear as follows:

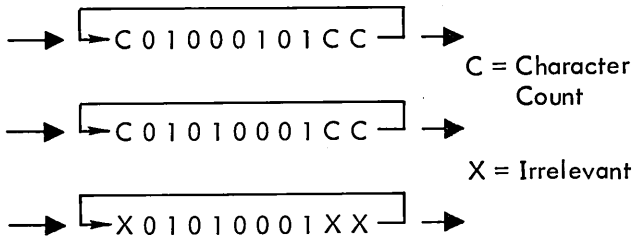

At the next pulse time, T8, all bits would be moved one bit position to the right and for succeeding pulse times as the register recirculates. At the least significant pulse time, T7, the bits of the least significant octal digit are in their respective now flip-flops, Wn1, Wn2, and Wn3. At succeeding pulse times the now flip-flops present the corresponding octal digits. The additional positions beyond the eight octals of the register act as fill-in bits to satisfy logic timing requirements (so that a word is back in its original position after one machine cycle of 11 clock pulses) and are also used to store the character count. Normal recirculation is allowed by the following logic:

$$Ww1 = \overline{W4}\ Wn1\ \overline{Wxx} + \ldots$$

$$Ww2 = \overline{W4}\ Wn2\ \overline{Wxx} + \ldots$$

$$Ww3 = \overline{W4}\ Wn3\ \overline{Wxx} + \ldots$$

$\overline{W4}\ \overline{Wxx}$ indicates the W-Register is not participating in some other operation.

3.46 The Character Register is composed of six, twelve, or twenty-four R-S type flip-flops. When shifting an input character from the Character Register into the W-Register or an output character from the W-Register to the Character Register, W4 is set for the period (T7 - T0) of one machine cycle. This enables the gating of one character precession in the W-Register by causing the data in the W-Register to recirculate through the Character Register. Refer to figure 3-3.

$$Ww1 = W4\ Wb1\ (T7 - T0) + \ldots$$

$$Ww2 = W4\ Wb2\ (T7 - T0) + \ldots$$

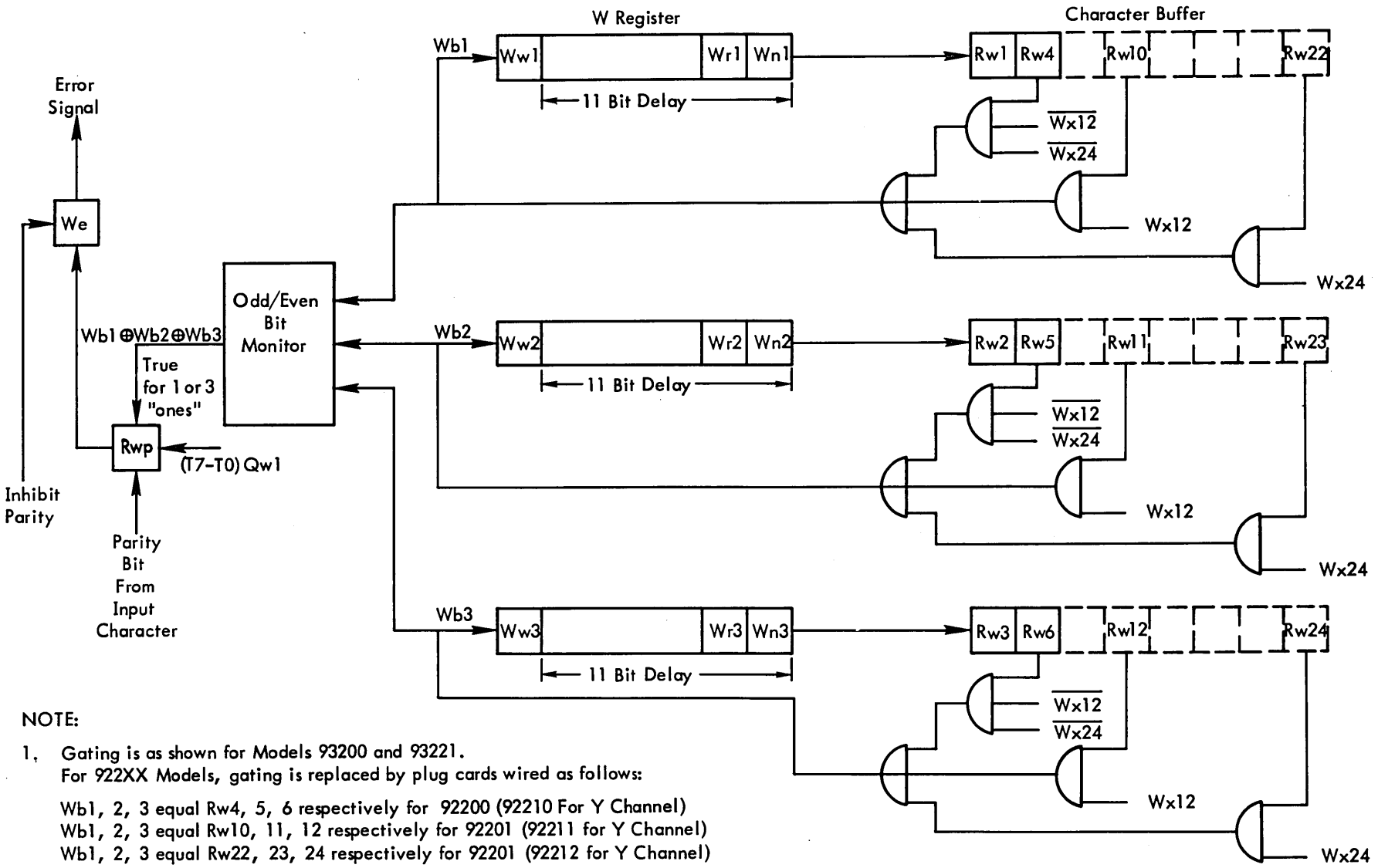

NOTE:

1. Gating is as shown for Models 93200 and 93221.
   For 922XX Models, gating is replaced by plug cards wired as follows:

   Wb1, 2, 3 equal Rw4, 5, 6 respectively for 92200 (92210 For Y Channel)
   Wb1, 2, 3 equal Rw10, 11, 12 respectively for 92201 (92211 for Y Channel)
   Wb1, 2, 3 equal Rw22, 23, 24 respectively for 92201 (92212 for Y Channel)

2. Wx12 and Wx24 are signals derived from the peripheral device to select the I/O character size. If the device does not designate a character size then $\overline{Wx12}$ and $\overline{Wx24}$ are true and Wx12 and Wx24 are false.

Figure 3-3. Precession Loop and Input Parity Checking Logic

$$Ww3 = W4\ Wb3 + \ldots$$

$$sRw1 = W4\ \overline{Wxx}\ (T7 - T0)\ Wn1 + \ldots$$

$$rRw1 = W4\ \overline{Wxx}\ \overline{Wn1} + \ldots$$

$$sRw2 = W4\ \overline{Wxx}\ (T7 - T0)\ Wn2 + \ldots$$

$$rRw2 = W4\ \overline{Wxx}\ \overline{Wn2} + \ldots$$

$$sRw3 = W4\ \overline{Wxx}\ (T7 - T0)\ Wn3 + \ldots$$

$$rRw3 = W4\ \overline{Wxx}\ \overline{Wn3} + \ldots$$

Wxx is a signal denoting that an MIW, WIM or Time Share operation is occurring.

$$Wxx = Rx\ Pwy + \ldots *$$

$$Pwy = 05\ **$$

*Rx is always false for the C-channel. Another term, not shown allows Wxx to function in that channel only on an interlaced basis.

**In Model 92200. See 05, Pw5 in the Glossary of terms.

3.47 The Time Share Operation is discussed beginning with paragraph 3.102. Since there are no WIM/MIW type instructions for TMCC-B, C, or D, Rx is always false for these channels.

3.48 The timing signals (T7 - T0) on the inputs of Ww1 and Ww2 are necessary to prevent interference with the storage of the character count which was previously described. The character count does not precess but recirculates. This recirculation is allowed by:

$$Ww1 = \overline{W4}\ Wn1\ \overline{(T7 - T0)} + \ldots$$

$$Ww2 = \overline{W4}\ Wn2\ \overline{(T7 - T0)} + \ldots .$$

3.49 During the input or output precession, the shift logic for the character register is as shown below. Depending on the 12- or 24-bit character option, all bits may not be installed.

$$sRw4 = W4\ \overline{Rw4}\ Rw1 + \ldots$$

$$rRw4 = W4\ Rw4\ \overline{Rw1} + \ldots$$

$$sRw5 = W4\ \overline{Rw5}\ Rw2 + \ldots$$

$$rRw5 = W4\ Rw5\ \overline{Rw2} + \ldots$$

$$sRw23 = W4\ \overline{Rw23}\ Rw20 + \ldots$$

$$rRw23 = W4\ Rw23\ \overline{Rw20} + \ldots$$

$$sRw24 = W4\ \overline{Rw24}\ Rw21 + \ldots$$

$$rRw24 = W4\ Rw24\ \overline{Rw21} + \ldots$$

The shift inputs for Rw1, Rw2, and Rw3 are given in paragraph 3.46. The precession of characters is controlled by W4. When a WIM or MIW instruction is executed, Wf is set. Wf remains set until the count in W7 and W8 is 00.

$$sWf = Rx\ T0\ Twy$$

$$rWf = \overline{W7}\ \overline{W8}\ W4\ (T6 + T5)$$

Rx Pwy = Wxx which indicates a WIM or MIW instruction is occurring. Wf is later used to indicate to the computer when the W-Register is full on input or empty on output.

3.50 Two other flip-flops, W5 and W6, detect external device clocks (which may occur either before or after Wf is set). The clock Ecw is first detected by W6 as follows:

$$sW6 = \overline{W5}\ Ecw\ T8\ \overline{W10\ W11\ W12\ W13\ W14}$$

$$rW6 = W4\ T0 + Wc$$

At the next T0 pulse after the device clock goes false, W5 sets allowing W6 to reset again. Setting of W5 inhibits further clock detection until the current clock is processed.

$$sW5 = \overline{W5}\ W6\ \overline{Ecw}\ T0 + \ldots$$

$$rW5 = W4\ T0 + \ldots$$

Setting of W4 is interlocked with W5 and Wf to allow one precession of the W Register to take place after each external clock signal.

$$sW4 = W5\ Wf\ T8\ \overline{Wg} + \ldots$$

$$rW4 = W4\ T0 + \ldots$$

The term, $\overline{Wg}$, explained in detail in paragraphs 3-66 and 3-150) is assumed to be true at this time.

3.51 The equation for Wf contains $\overline{W7}\ \overline{W8}$, indicating that precession is complete when the character count reaches 00. The count down is enabled by W4 and is accomplished by:

$$sW8 = W7\ \overline{W8}\ W4\ T0 + \ldots$$

$$rW8 = W8\ W4\ T0 + \ldots$$

$$rW7 = W7\ \overline{W8}\ W4\ T0 + \ldots$$

3.52 The foregoing discussion was limited to processes common to input and output operations. The interrupt

function, which allows the TMCC to signal the computer when it is ready to transfer a word to or from memory, was omitted. In subsequent paragraphs, features peculiar to input or output operation are discussed separately. Details concerning interrupt operation are included.

3.53 INPUT PROCESS (W9 true)

3.54 The characteristics of a typical input clock signal and its relationship to the input data and Clock Counter flip-flops are illustrated in figure 3-4. Examination of figure 3-4 indicates that if the data is to be sampled by W6 $\overline{W5}$ it has to be on by the time the clock, Ecw, returns to zero volts. Also, in order not to be read by the previous or next clock, the data may not come on until at least one machine cycle after the previous clock and must go off before the next clock appears.

3.55 Two detailed examples of the clock signal, Ecw, are illustrated in figure 3-5. To be assured of a timing pulse occurring during the on period (to set W6) and the off period (to set W5) of Ecw, each of these periods must be at least one machine cycle in length. This prescribes an input clock cycle of no less than two machine cycles. The clock rate must be somewhat slower than this for proper operation of W6, W5, and W4. Figure 3-5a illustrates two input clocks with timing such that the second clock is missed. Any clock rate slower than that illustrated in figure 3-5a would be satisfactory, however, a safety margin must be provided to compensate for noise and variations in waveshape and frequency.

3.56 The input frequency may be increased as illustrated in figure 3-5b if the clocks are interlocked within the peripheral device with W5 and W6 from the TMCC such that

$$\overline{(Ecw)} = \overline{(\text{Device Clock})\ \overline{W5}\ \overline{W6}}$$

In this case, only two machine cycles per input clock are needed. Some of the peripheral device couplers include this interlocking feature.

3.57 When a Buc type EOM instruction is executed to activate the TMCC for an input operation, the halt detector, Wh, is reset and the computer interlock flip-flop, Wf, is set by the clearing signal, Wc.

$$Wc = Buc\ \overline{C17}\ (T6 + T5) + - - -$$
$$sWf = Wc\ \overline{Wh} + \ldots$$
$$rWh = Wc\ (T6 + T5) + \ldots$$

This prepares the Character Register to precess the first input character into the W- Register enabling W4 which gates Ww1, Ww2 and Ww3.

3.58 The Character Register and parity flip-flop are cleared originally and again between each input character by $\overline{W9}\ \overline{W6}\ \overline{W5}\ \overline{W4}$. After processing the Buc type EOM instruction, the Character Register is ready to receive an input character and clock even though a WIM instruction is not immediately given. The input bits, Zw1 through Zw24 and the parity bit Zwp, are gated into the Character Register and the Parity Flip-Flop by $\overline{W9}$ W6 $\overline{W5}$. $\overline{W9}$ signifies an input operation and W6 $\overline{W5}$ indicate an input clock has been detected from the peripheral device.

$$sRw1 = \overline{W9}\ W6\ \overline{W5}\ Zw1$$
$$rRw1 = \overline{W9}\ \overline{W6}\ \overline{W5}\ \overline{W4}$$
$$sRw24 = \overline{W9}\ W6\ \overline{W5}\ Zw24$$
$$rRw24 = \overline{W9}\ \overline{W6}\ \overline{W5}\ \overline{W4}$$
$$sRwp = \overline{W9}\ W6\ \overline{W5}\ Zwp$$
$$rRwp = \overline{W9}\ \overline{W6}\ \overline{W5}\ \overline{W4}$$

3.59 Precession then takes place as described earlier and another input character can be read into the Character Register. This read-precess cycle is repeated for each input character until the Character Counter is decremented to 00 causing Wf to reset. Resetting of Wf inhibits further precessions and indicates to the computer that the W-Register is full and ready to transfer a word into memory. The program should now provide a WIM instruction to enable the transfer. One more character may still be stored in the Character Register before receiving the WIM instruction. Further input characters are blocked because W4 is inhibited while Wf is reset. This prevents W5 from resetting, which in turn disables clock detection by W6. When a WIM instruction does occur late, The Error Detection Flip-Flop, We, is set. This condition can be tested by an SKS instruction. The error detection flip-flop is reset by Wc which occurs with an EOM-Buc instruction.

$$sWe = W0\ \overline{W6}\ W5\ Ecw\ T8 + \ldots$$
$$rWe = Wc\ \overline{Wh}$$

This equation signifies that a WIM instruction is late if the clock signal, Ecw, is received before the previous character has been precessed out of the Character Register. The W0, Halt Interlock, and Wh, Halt Detector, signals appearing here are discussed in detail in paragraphs 3.65 and 3.66. When the interlock feature of figure 3-5 is employed, the condition $\overline{W6}$ W5 Ecw cannot occur to set We. Under such circumstances, the peripheral device (or coupler) must be capable of detecting its own rate errors and reporting them via the Error Signal line, $\overline{(Wes)}$.

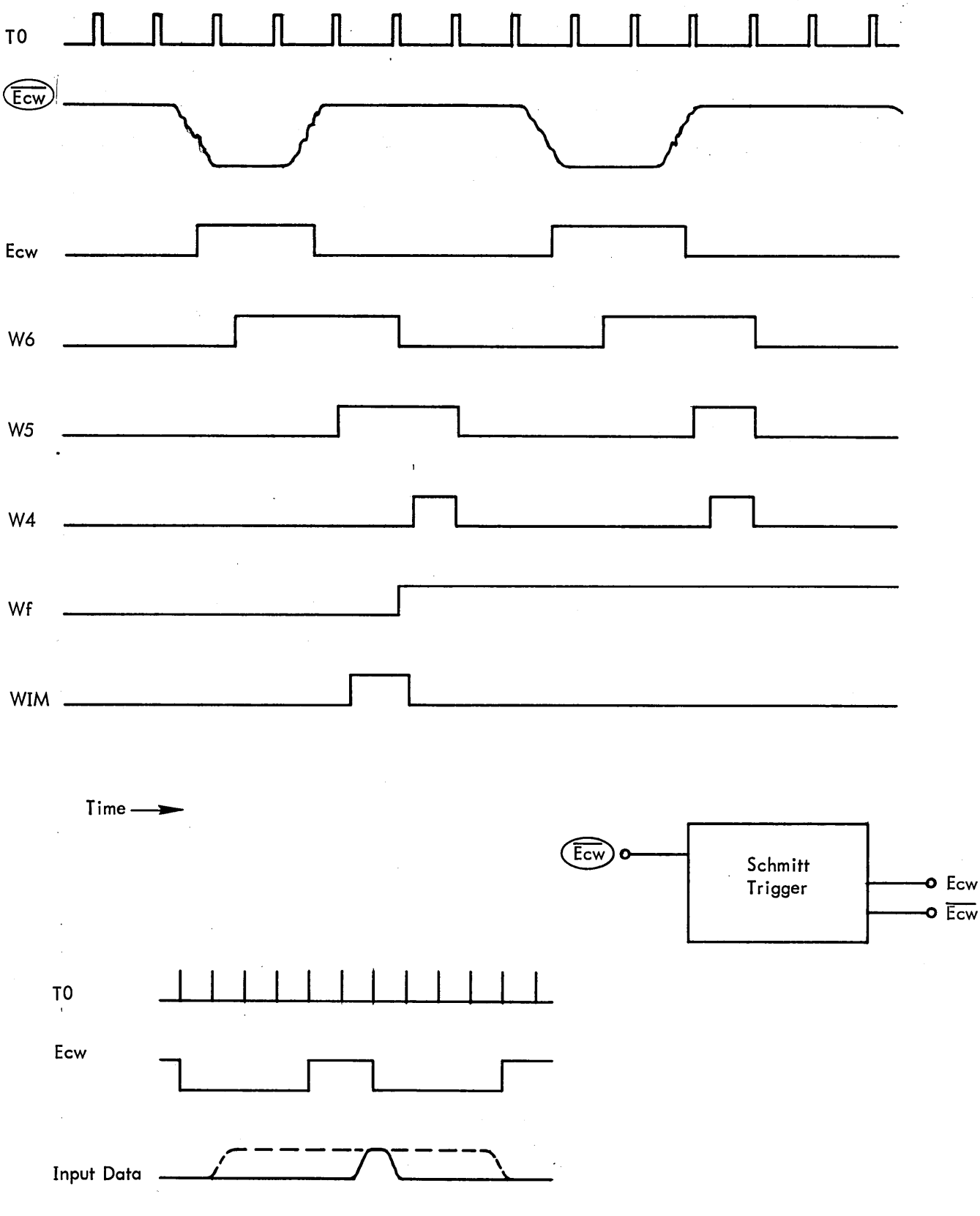

Figure 3-4. Input Clock Timing Charts (Typical)

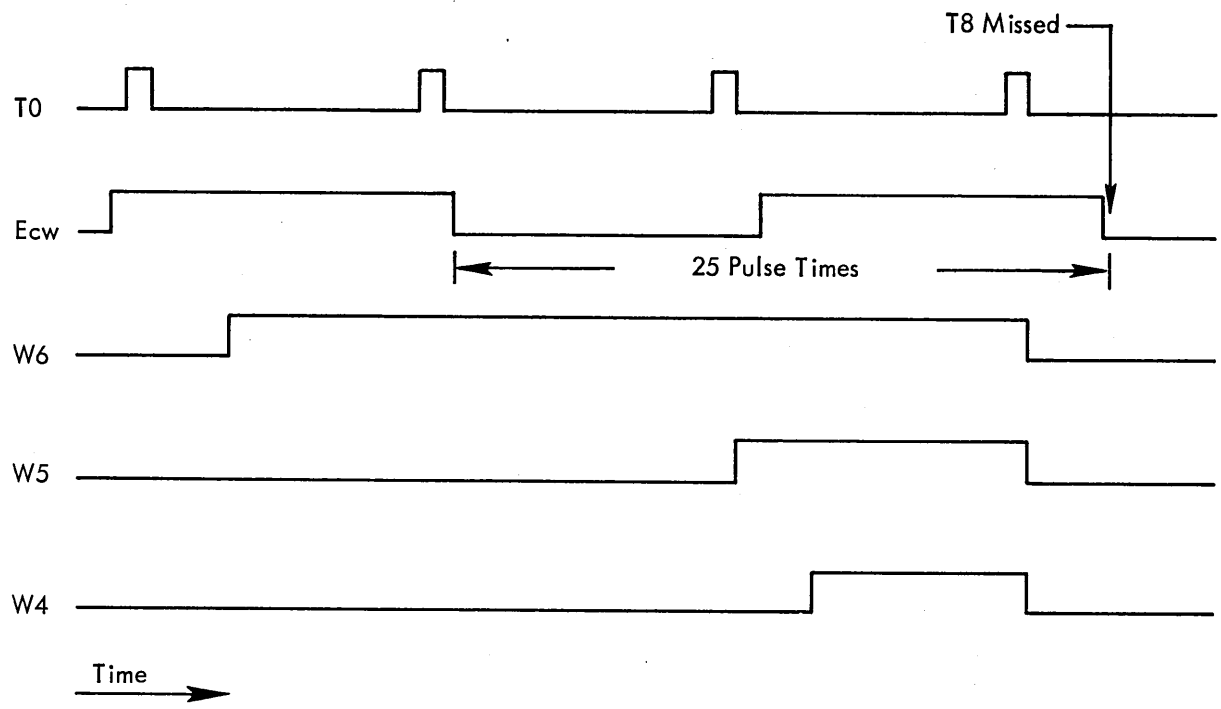

a. Input Clocks too Fast

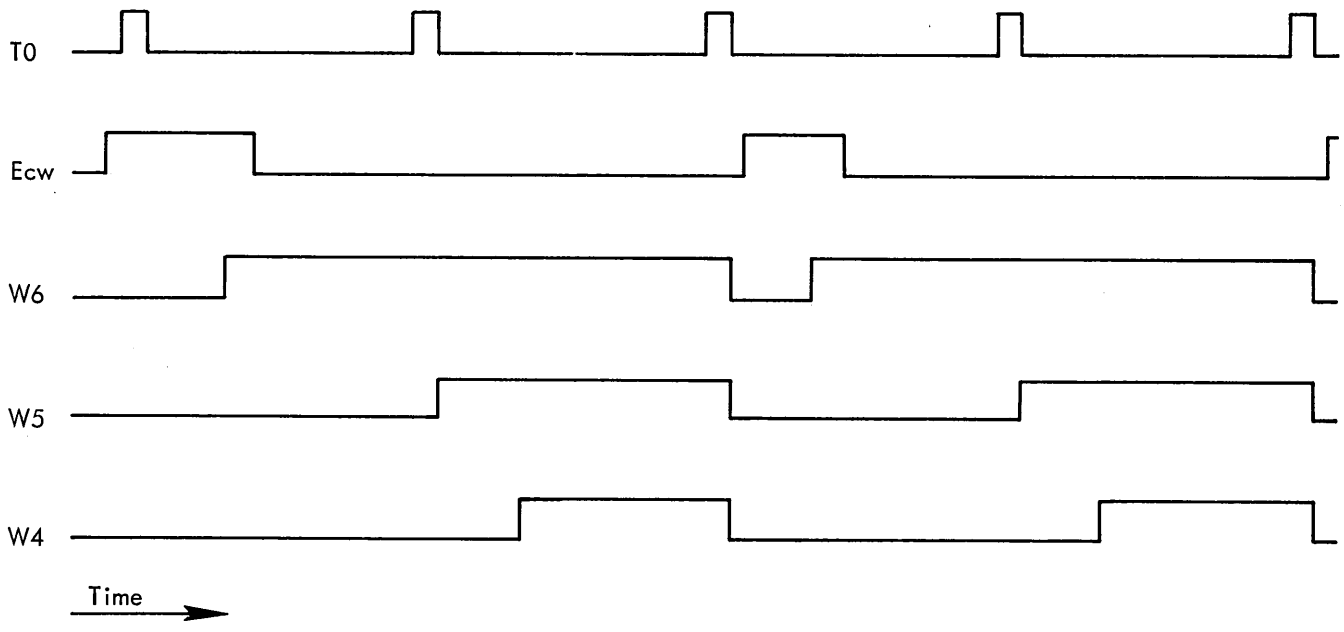

b. Input Clocks Interlocked With $\overline{W5}$ $\overline{W6}$

Figure 3-5. Input Clock Timing Charts

$$sWe = Wes + \ldots$$

3.60 The Input Timing Chart, figure 3-6, indicates the flow of the basic input process. The first WIM instruction is shown occurring late to illustrate how the Character Register accepts one more character after the W-Register is full.

3.61 The error detector flip-flop may also be set if the input character has even parity.

$$sWe = \overline{W9}\ \overline{W6}\ \overline{W5}\ \overline{W4}\ Rwp\ \overline{Wg}\ Npw\ \overline{Iwg} + \ldots$$

In this equation, $\overline{W9}$ indicates an input process, $\overline{W6}$ $\overline{W5}$ $\overline{W4}$ indicates that the received character has already been precessed into the W-Register when We is set. The term Npw is a signal received from the peripheral device to disable parity checking when a parity bit is not supplied. Wg and Iwg are End-of-Record and Extended Mode signals. These are discussed in paragraph 3-131 dealing with Interlace. Rwp is the Parity Flip-Flop which is toggled while the character is precessing out of the Character Register. During input, the operation of Rwp takes place as follows. Initially and again between each character precession, Rwp is reset by $\overline{W9}$ $\overline{W6}$ $\overline{W5}$ $\overline{W4}$. If the parity bit of the input character is a one, Rwp is set by $\overline{W9}$ W6 $\overline{W5}$.

$$sRwp = \overline{W9}\ W6\ \overline{W5}\ Zwp + \ldots$$
$$rRwp = \overline{W9}\ \overline{W6}\ \overline{W5}\ \overline{W4} + Wc + \ldots$$

Since W6 is set at pulse time T8 in the above equations Rwp may be set (if Zwp = 1) at the next pulse time, T7. At the next T0, W5 is set and the state of Rwp is reversed at T8, three pulse times later.

$$sRwp = Wf\ W5\ T8\ \overline{Rwp} + \ldots$$
$$rRwp = Wf\ W5\ T8\ \overline{W9}\ Rwp + \ldots$$

As a result of this reversal, Rwp is set if the input parity bit was a zero and reset if the bit was a one. The parity of the 6-, 12- or 24-data bits of the input character is now examined. This takes place while the character is being precessed into the W-Register. While precession occurs, the three bits of each octal group appearing as the output of the Character Register are tested by (Wb1 $\oplus$ Wb2 $\oplus$ Wb3). This parity logic term is true whenever there is an odd number of one's in a three bit group. It is used to reverse the state of Rwp for each such octal group containing an odd number of ones.

$$sRwp = \overline{W9}\ W4\ \overline{Rwp}\ (Wb1 \oplus Wb2 \oplus Wb3)$$
$$(T7 - T0)\ Qw1 + \ldots$$

$$rRwp = \overline{W9}\ W4\ Rwp\ (Wb1 \oplus Wb2 \oplus Wb3)$$
$$(T7 - T0)\ Qw1 + \ldots$$

The proper state of Rwp is thereby achieved, establishing whether the incoming character had a parity error. For example, if the following twelve bit character were received,

1 101 101 111 001

(parity bit)

its parity bit would cause Rwp to start off by setting then being reversed to the reset state. Of the four octal groups, two of them have an odd number of ones. This would cause Rwp to change state twice as precession took place thus returning to the reset condition. With Rwp reset, no parity error would be reported by We.

3.62 The number of octal groups that must be checked for each character precession and which outputs of the Character Register to be monitored for 6-, 12-, and 24-bit characters must also be determined. The number of octal groups to check is solved by (T7 - T0) Qw1, which is true for 2, 4, or 8 pulse times in accordance with the character length. Table 3-2 lists the values of signal Qw1. The character length may be determined by hardwired logic or by gating of Wx12 and Wx24 signals (depending on the model). Which outputs to monitor is solved by using the same gating signals, Wx12 and Wx24, or by hardwiring to select the proper outputs. Whether gating or hardwiring is employed depends on the equipment model number. The variations in models are detailed in table 3-2.

3.63 The characters have now been read into the Character Register, precessed into the W-Register, and parity has been checked. The contents of the W-Register must now be transferred to the C-Register in the Central Processor Unit (CPU). Each time a WIM (AIM) instruction is executed, the contents of the W (A) and C-Registers are interchanged. At this time (Ø4 of the WIM instruction execution) precession is blocked by W4 and recirculation is blocked by Wxx. The condition $\overline{Wf}$ $\overline{W9}$ is used to signal the computer that the exchange can take place.

$$Wxx = Rx\ Pwy + \ldots \qquad (Pwy = 05 \text{ in Model } 92200)$$

Rx indicates that a WIM or MIW instruction is being processed. It is always false for the C and D channels, since no WIM or MIW type instructions exist for those channels.

$$Ww1 = \overline{W4}\ C21r\ (T7 - T0)\ Wxx$$

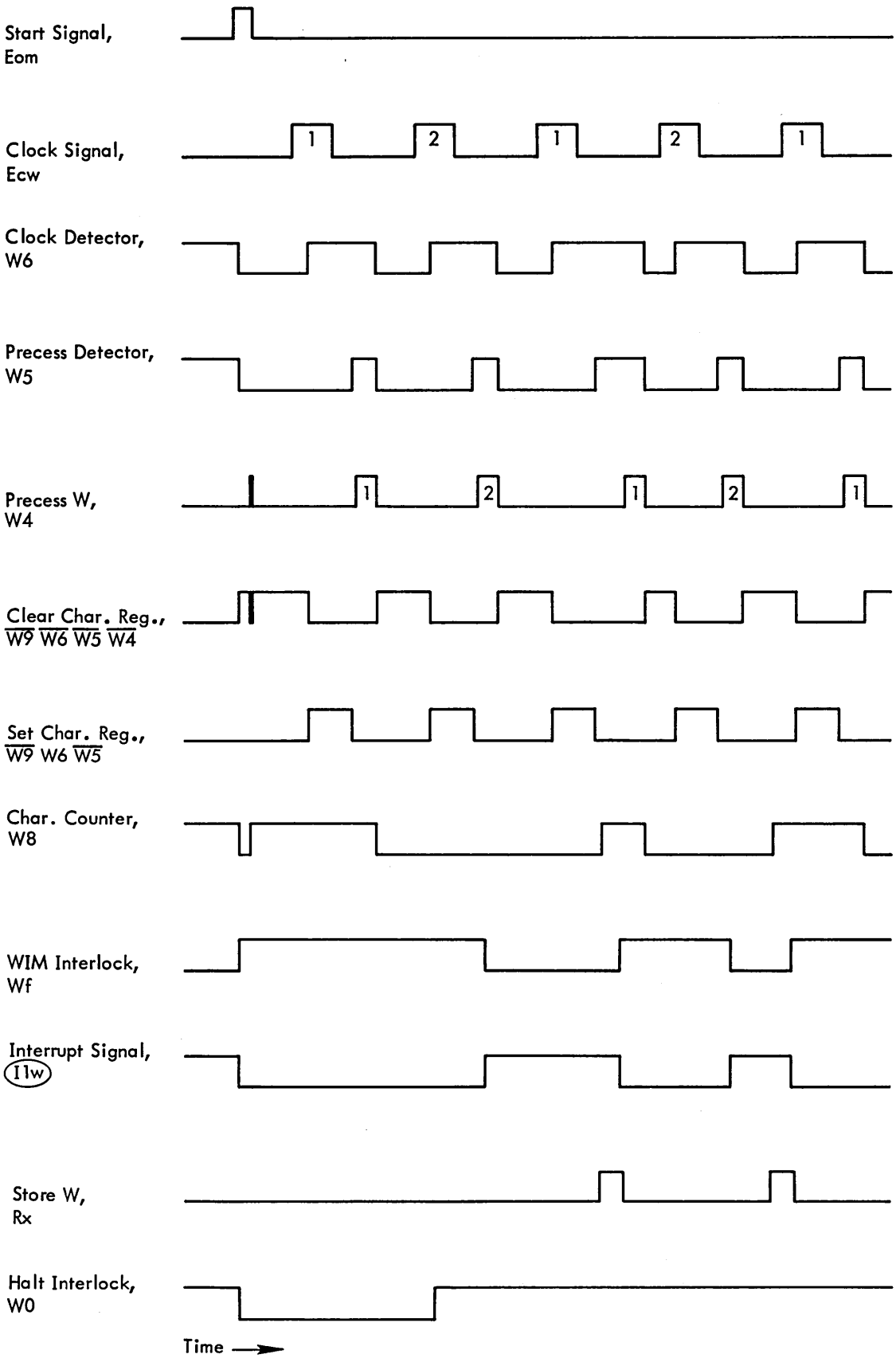

Figure 3-6. Input Timing Chart (Two Characters Per Word)

Table 3-2. Value of Parity Timing Signal Qw1

TMCC Model No.	Value of Qw1	Time When (T7 - T0) Qw1 is true
92200	$Qw1 = Qr1\ Qr4$*	T7, T6
92201	$Qw1 = Qr4$*	T7, T6, T5, T4
92202	Qw1 = 1 (Qw1 is deleted)*	T7 through T0
93200/93221	$Qw1 = \overline{Wx12\ \overline{Qr4} + \overline{Wx12}\ \overline{Wx24}\ \overline{Qr1\ Qr4}}$	T7, T6
		if Wx12 and Wx24 are off.
		T7 through T4
		if Wx12 is on.
		T7 through T0
		if Wx24 is on.

*Qw1 is replaced by the signal shown.

$$Ww2 = \overline{W4}\ C22r\ (T7 - T0)\ Wxx$$

$$Ww3 = \overline{W4}\ C23r\ (T7 - T0)\ Wxx$$

The terms C21r, C22r, and C23r are logically equivalent to the outputs of the C-Register, C21, C22, and C23, respectively, but are implemented through special drivers for this transfer function in order to minimize the delay. The three parallel portions of the C-Register behave in a manner similar to one another, therefore only one is listed below (all three are illustrated in figure 3-7).

$$sC0 = Cr3\ (Rx\ Rn1 + \ldots)$$

$$rC0 = Cr3\ \overline{(Rx\ Rn1 + \ldots)}$$

$$sRn1 = Rwyl\ \overline{Tsr} + \ldots$$

$$rRn1 = \overline{Rwyl}\ \overline{Tsr} + \ldots$$

3.64 The data transfer takes place during one machine cycle of the WIM instruction (Rx) and when completed, the computer Interlock Flip-Flop, Wf, is set to prepare the TMCC to accept the next input word.

$$sWf = Rx\ T0\ Twy + \ldots$$

Terminating an input operation can take place in one of several ways. The more sophisticated methods are discussed in paragraph 3.131 dealing with the interlace. The simplest procedure is to program an EOM instruction to disconnect the peripheral unit after a sufficient number of WIM instructions have been processed. Other methods will now be discussed and illustrated as they apply to specific devices. Use will be made of the interlock and interrupt signals while considering these devices. These features are applicable to other I/O units as well.

3.65 A photoreader input process (refer to figure 3-8) can be terminated by detecting tape gap following a block of input data. The tape gap consists of one or more tape frames where only the sprocket hole is punched. However, the photoreader must be able to initially read through a tape gap or leader without terminating at every tape frame. This is accomplished by the Halt Interlock Flip-Flop, W0, which detects the start of a block of data and is used by the peripheral device coupler to inhibit sprocket clocks until the first (or second) character is sent to the TMCC. Clocks for these first characters are derived from the characters themselves. The equation for W0 is given below, but to fully understand its action, the equation for a typical photoreader clock signal is also shown.

$$sW0 = \overline{W9}\ W6\ \overline{W8}\ Ecw + \ldots$$

$$rW0 = Wc + \ldots$$

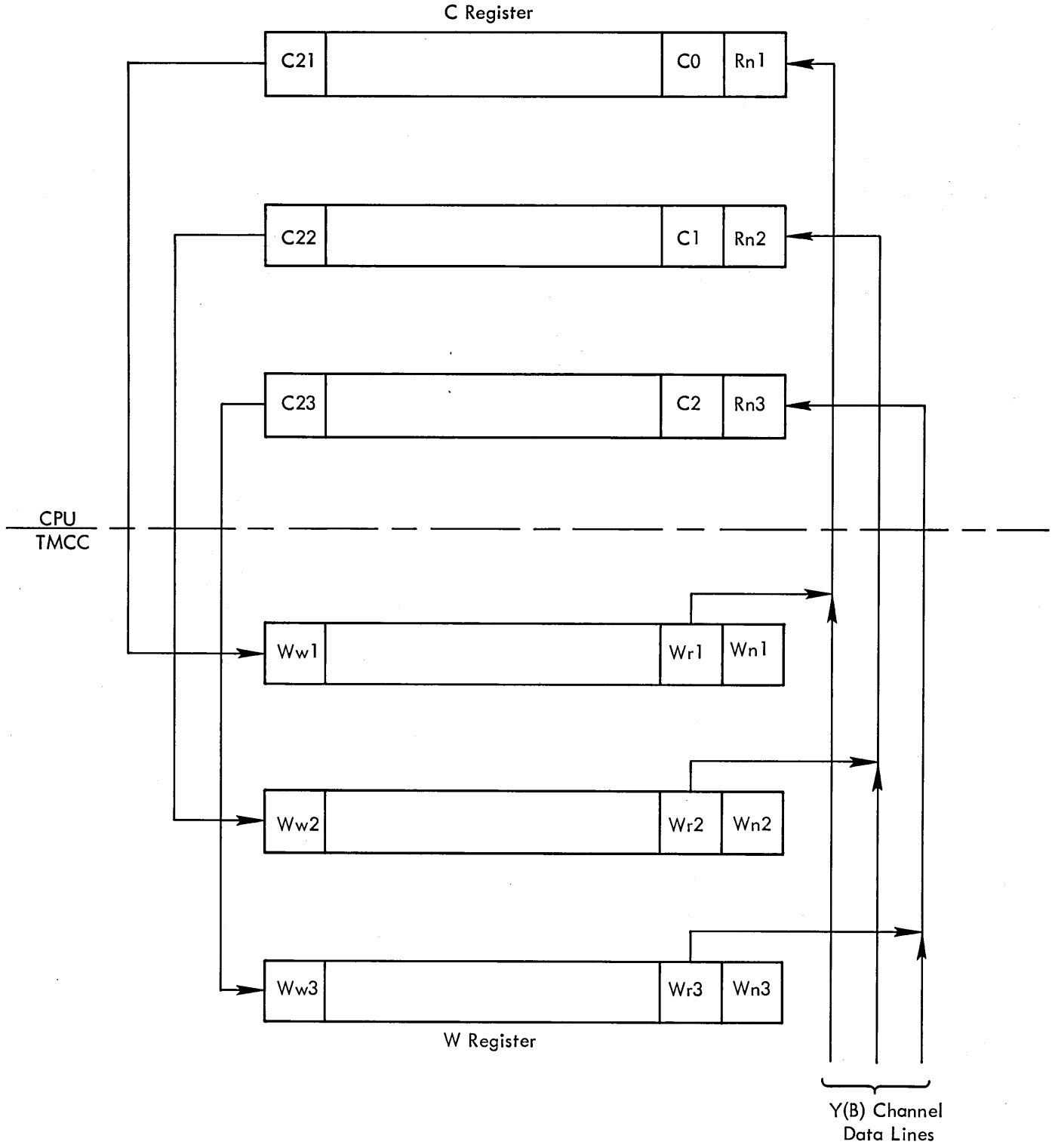

Figure 3-7. Data Transfer from W Register to C Register

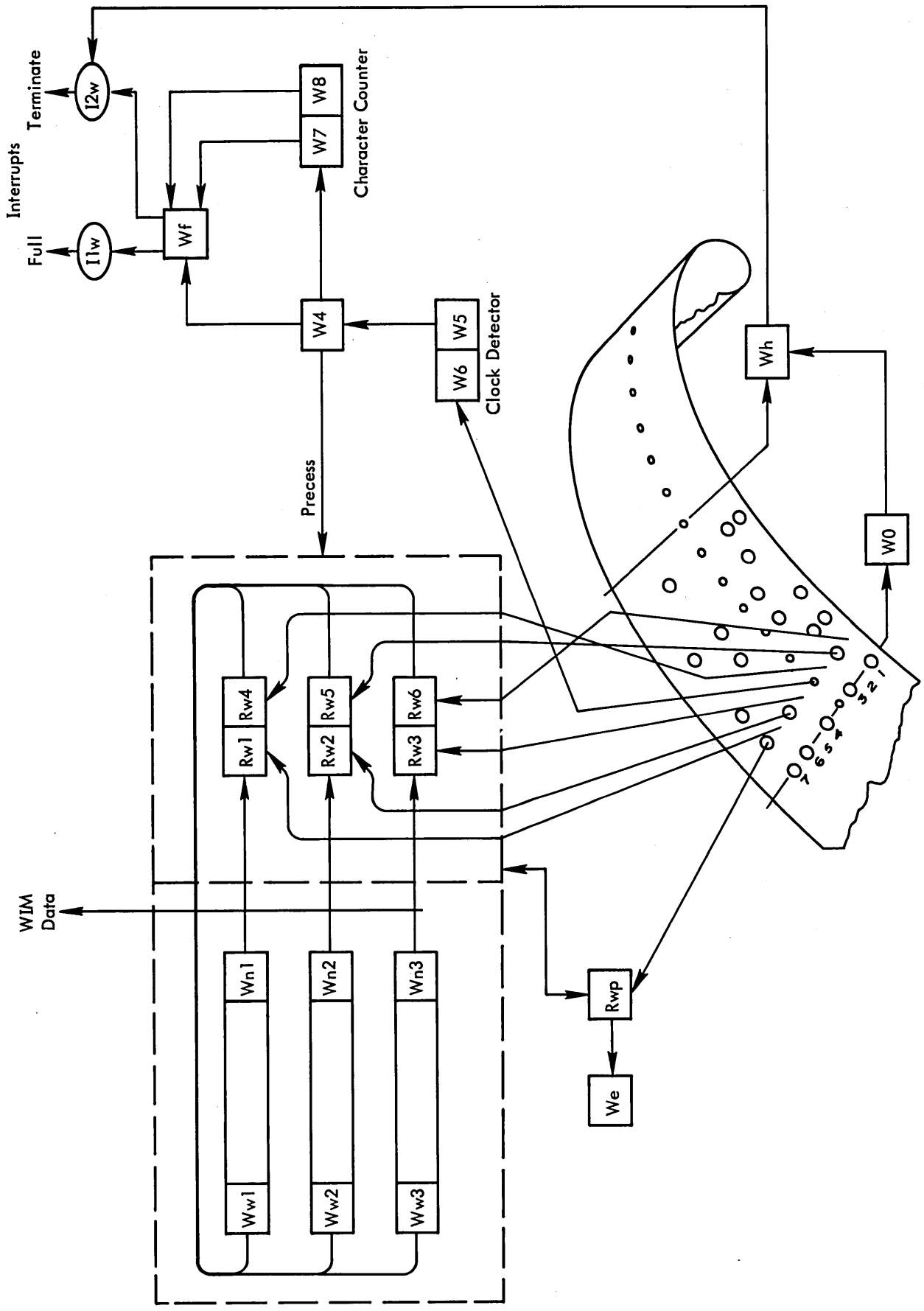

Figure 3-8. Information Flow Diagram - Phototape

$$Ecw = (Zw1 + Zw2 + Zw3 + Zw4 + Zw5 + Zw6 + Zwp + W0)\ Sp\ Re$$

In the latter equation, Zw1 through Zw6 are the character reader signals, Zwp is the parity bit signal, Sp is the sprocket hole signal, and Re is a photoreader enable level. The result of this combination is that while W0 is reset, the clocks are derived from the character bits. After setting W0, the term in parentheses is always true so Ecw varies with Sp only. When the first character is read following leader, a clock is produced which sets W6. W6 allows W0 to be set. The term W8 on the input of W0 prevents setting of W0 until the second character appears (in the four character per word mode). Waiting until the second character is desirable when reading from magnetic tape so a single noise character within a gap does not set W0. It is also important during a reverse scan of magnetic tape to avoid setting W0 on the longitudinal parity character.

3.66 After W0 has been set to enable the clocks to read in data, the End-of-Record Detector, Wg, is used to detect the first all-zeros, or gap, character (all zeros including the parity bit). Wg then enables the Halt Detector Flip-Flop, Wh.

$$sWg = \overline{W9}\ \overline{W10}\ \overline{W11}\ W12\ \overline{W13}\ (\overline{Rw1}\ \overline{Rw2}\ \overline{Rw3}\ \overline{Rw4}\ \overline{Rw5}\ \overline{Rw6}\ \overline{Rwp})\ W5\ \overline{(T7 - T0)}\ \overline{(W10\ W11\ W12\ W13\ W14)}$$

$$rWg = Wc$$

$$sWh = Wg\ \overline{Iwg}\ T8$$

The combination, $\overline{W9}\ \overline{W10}\ \overline{W11}\ W12\ \overline{W13}$, at the input of Wg decodes the fact that paper tape reader number 1 or number 2 is being used for input. The terms $(\overline{W10}\ \overline{W11}\ \overline{W12}\ \overline{W13}\ \overline{W14}$ are redundant and are due to the logic mechanization.

3.67 After Wg sets, parity errors no longer set the Error Detector Flip-Flop, We.

$$sWe = \overline{W9}\ \overline{W6}\ \overline{W5}\ \overline{W4}\ Rwp\ \overline{Wg}\ Npw\ \overline{Iwg} + \ldots$$

Disabling We avoids parity testing for the next few machine cycles. During this time a complete word is precessed into the W-Register if the input did not supply sufficient characters to finish the last word. In the case where Wh sets but the W-Register is not yet full, W4 is set for successive cycles until the character counter reads 00. This process is termed "flushing". When W7 W8 read 00, Wf is reset and a Wc signal is generated to disconnect the TMCC.

$$sW4 = Wh\ Wf\ T8 + \ldots$$

$$rW4 = W4\ T0 + \ldots$$

$$sWf = Wc\ \overline{Wh} + \ldots$$

$$rWf = \overline{W7}\ \overline{W8}\ W4\ (T6 + T5) + \ldots$$

$$Wc = Wh\ \overline{Wf}\ (T3 - T0) + \ldots$$

The clear signal, Wc, disconnects the tape reader and clears the character counter, End-of-Record Detector, and Halt Interlock.

$$rW0 = Wc$$

$$rWg = Wc$$

The Halt Detector is then reset at the next T8 pulse time.

$$rWh = Wh\ \overline{Wf}\ T8$$

3.68 By allowing the character counter to count down to 00 before resetting, the final input word is filled-in with zero characters. The Phototape Termination Timing Charts illustrate the flow of this termination precess. Figure 3-9 illustrates the case where the last input word does not contain a full complement of characters. Figure 3-10 illustrates the timing for the case where the last word does have all characters filled before an all zeros character is detected.

3.69 If the interrupt system is enabled during the termination process, the $\overline{Wf}$ Wh condition generates an interrupt signal to call for a final WIM instruction from the computer.

$$I2w = (En + \overline{En})\ \overline{Iwg}\ Wh\ \overline{Wf}$$

The signals En and $\overline{En}$ are programmable and manual enable signals for the interrupt system. The final WIM instruction, as provided by a halt subroutine, stores the last word even though it may not have originally contained a sufficient number of characters. The final WIM instruction may be executed before or after the channel is disconnected. However, additional WIM instructions after that cause the computer to lock-up because it would be waiting for another input word.

3.70 When operating with devices other than punched paper tape, the input process is very similar to that just described, although the method used to derive the clock signals may vary somewhat from one device to another. Also, the gap (End-of-Record) signal, when required, is normally supplied by the external device rather than developed within the TMCC as is done for paper tape.

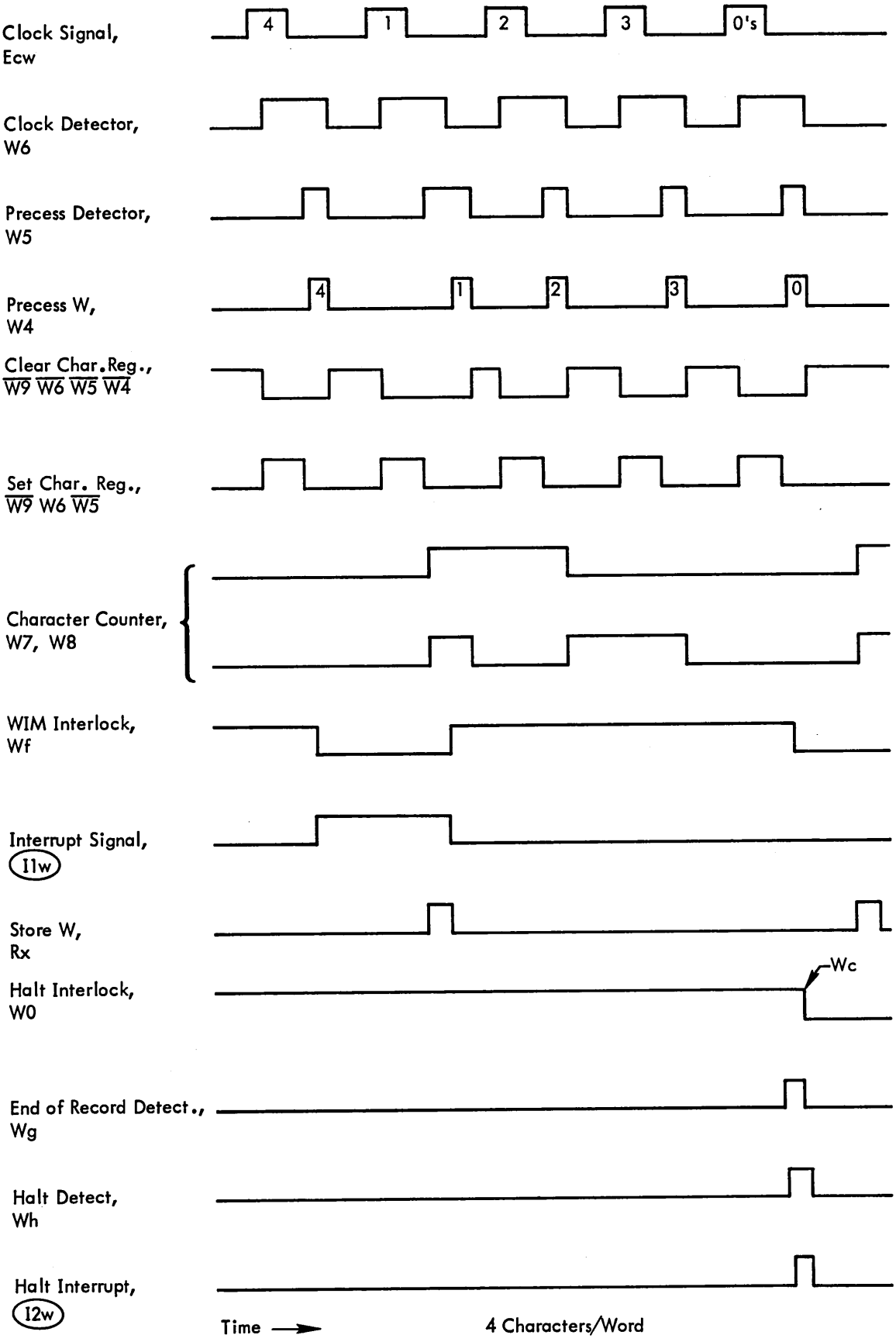

Figure 3-9. Termination Timing A. Phototape Input

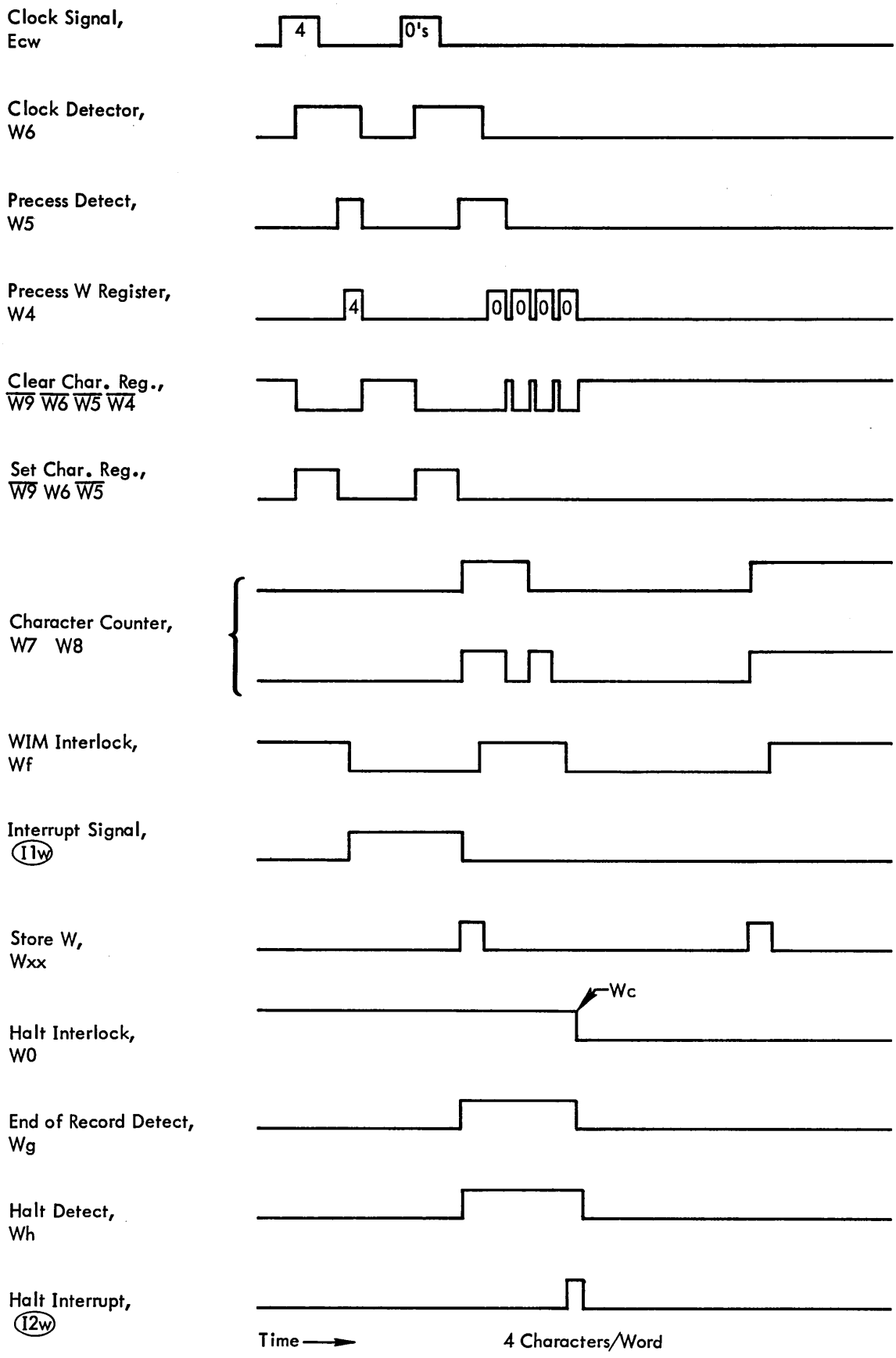

Figure 3-10. Termination Timing B - Phototape Input

3.71 An information flow diagram for magnetic tape input is illustrated in figure 3-11. The input timing for magnetic tape using the two character per word mode is illustrated in figure 3-12. When terminating, the magnetic tape unit generates a halt signal with a time delay triggered by the tape gap and W0. The halt detector is then triggered by the delayed signal.

$$sWg = Whs\ \overline{(T7 - T0)}\ \overline{W10\ W11\ W12\ W13\ W14}$$

$$rWg = Wc$$

$$sWh = Wg\ \overline{Iwg}\ T8$$

Whs is a halt signal from the peripheral device. In this case, it is the delayed signal from the magnetic tape unit. The delay allows time for the tape reader to check the longitudinal parity character following the block of data. Refer to figure 3-11. When a longitudinal parity error occurs, the tape reader sends an error signal (Wes) and the Error Detector is set. The (Wes) signal may also result from a rate error.

$$sWe = Wes + \ldots$$

Other devices may also supply error inputs via the (Wes) line. Unless inhibited by Npw, character parity is checked by Rwp when precession takes place.

3.72 Input termination timing for magnetic tape is illustrated in figure 3-13. The figure illustrates the case in which the input furnishes only three characters for the last four character word and the remaining character is filled with zeros. Also illustrated in figure 3-13 are the Halt Interrupt, calling for one more WIM instruction, and the final WIM instruction, itself.

3.73 Another type of input operation in which the TMCC participates is the scanning of magnetic tape. The process is similar to the usual magnetic tape reading process except that the character counter is prevented from reaching 00 again after W0 is set. The counter flip-flop, W8, is held in the "one" or set state by:

$$sW8 = \overline{W7}\ \overline{W9}\ W10\ W11\ \overline{Wh} + \ldots$$

In this equation, $\overline{W9}$ W10 W11 indicates a scan process has been programmed. A forward scan can be initiated by an EOM 0363X instruction. It may also be programmed by modifying a read process. While magnetic tape is being read, if an EOM14000 instruction is given, the flip-flop, W10, is set to convert directly from reading to scanning of the same tape.

$$sW10 = (Ioc\ C12\ \overline{C17}\ \overline{C19}\ \overline{C20}\ \overline{C21}\ \overline{C22}\ \overline{C23})\ \overline{W9}\ \overline{W10} + \ldots$$

With W8 of the character counter held in a set state, the Buffer Full Signal, $\overline{W9}\ \overline{Wf}$, and the normal interrupt signals are prevented by keeping Wf from being reset.

$$rWf = \overline{W7}\ \overline{W8}\ W4\ (T6 + T5) + \ldots$$

$$I1w = \overline{Wf}\ W0\ \overline{Wh}\ (En + (En))\ \overline{Iw}\ \overline{Ew}\ \overline{Iwg} + \ldots$$

$$I2w = (En + (En))\ \overline{Iwg}\ Wh\ \overline{Wf} + \ldots$$

This allows each input character to be precessed into the W-Register without requiring WIM instructions to set Wf. However, when the end of a data block is reached, Wf is reset by a gap signal from the tape reader.

$$rWf = \overline{W9}\ W10\ W11\ W0\ Mtgw\ \overline{W7}\ (T6 + T5)\ Wh$$

And an interrupt is generated.

$$I1w = \overline{Wf}\ W0\ \overline{Wh}\ (\ldots)$$

This interrupt calls on the computer to enter a subroutine to execute a WIM instruction. The WIM instruction stores the last four characters read from the tape and which were precessed into the W-Register. The WIM instruction sets W7 and Wf in preparation for scanning another record.

$$sW7 = Wxx\ Wn1\ \overline{(T7 - T0)}\ W4 + \ldots$$

$$sWf = Tx\ T0\ Pwy + \ldots \qquad (Pwy = 05 \text{ for } 92200)$$

3.74 Based on a block counting program or an examination of the last four characters, the computer may reset W0 with another EOM0363X instruction, to cause the scan process to continue without a pause through the gap and into the next record. If W0 is not reset, the scan process is terminated by a (Whs) signal from the tape unit in a manner similar to that previously described for normal input termination. When the scan process does terminate, a halt interrupt signal is generated.

$$I2w = (En + (En))\ \overline{Iwg}\ Wh\ \overline{Wf}$$

3.75 During the scan process the character parity is checked by the Rwp flip-flop and the longitudinal parity is checked by the tape unit (only if W0 is reset after the longitudinal parity character). Any error during the scan process sets the Error Detector flip-flop, We.

3.76 A reverse scan of magnetic tape is started by an EOM 0563X instruction. The process is similar to a forward scan, except that the WIM instruction at the end of a data block scan stores the first four characters of the block in reverse order. The longitudinal parity is not properly checked, with the result that We may be erroneously set.

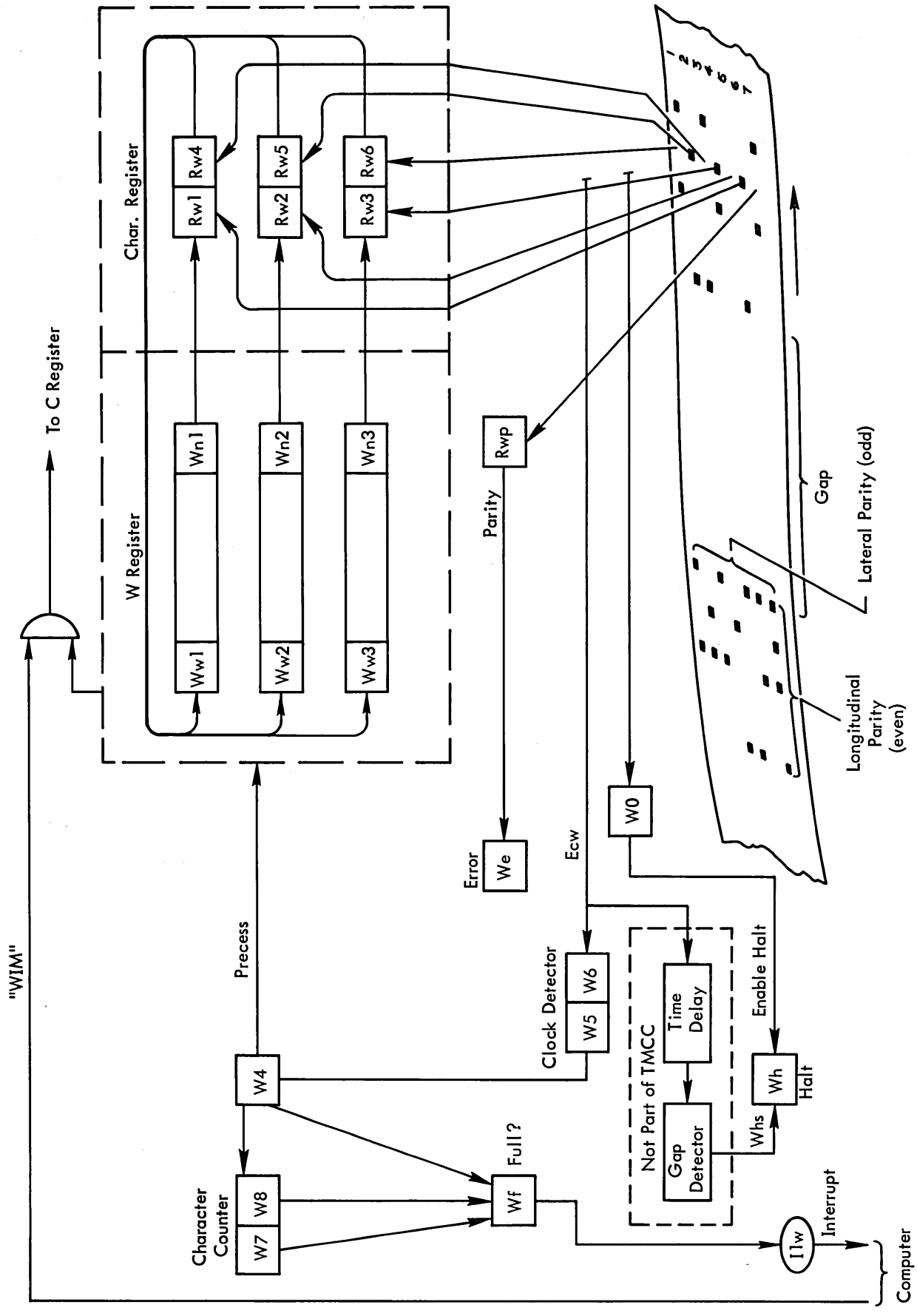

Figure 3-11. Information Flow Diagram - Magnetic Tape

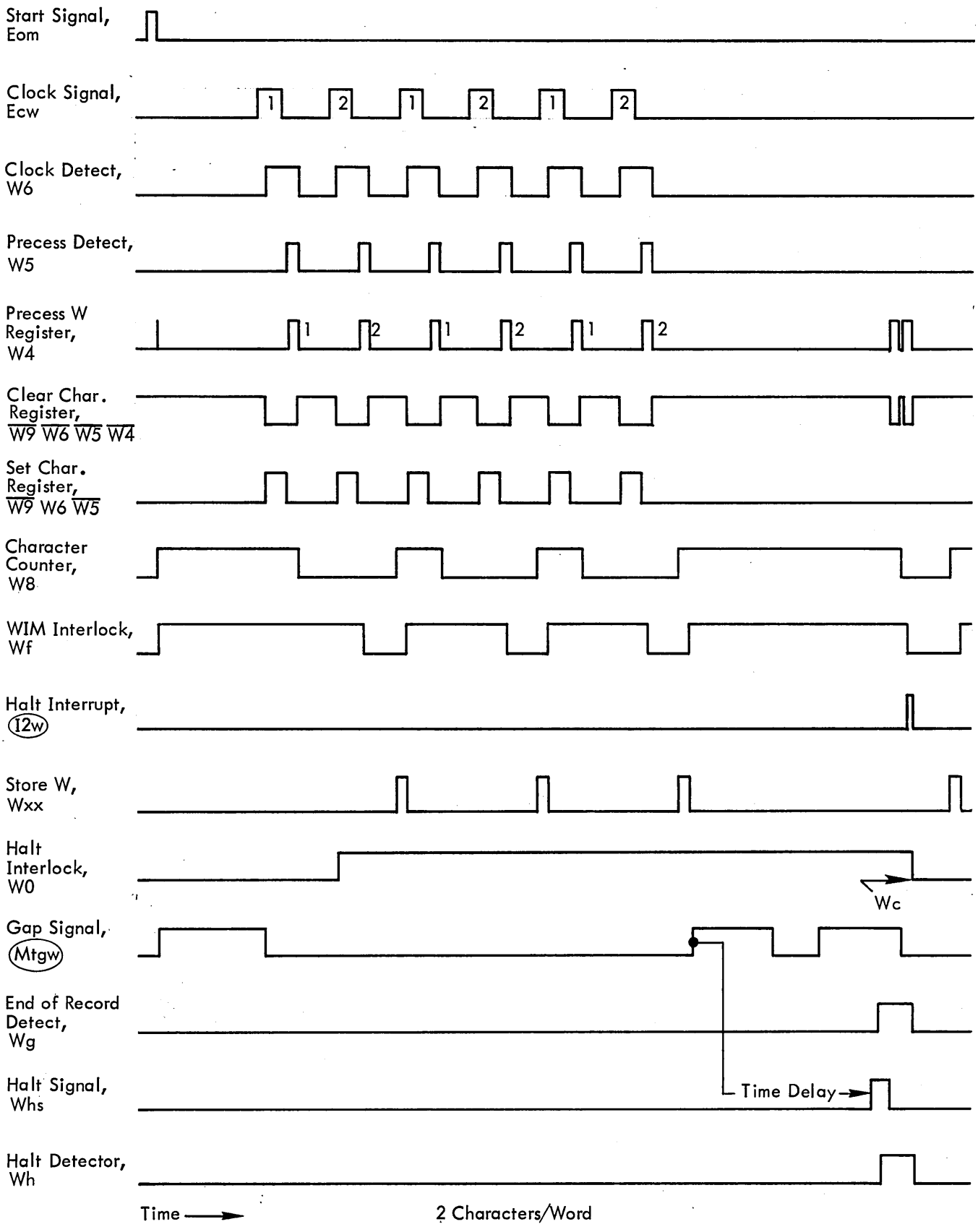

Figure 3-12. Input Timing - Magnetic Tape

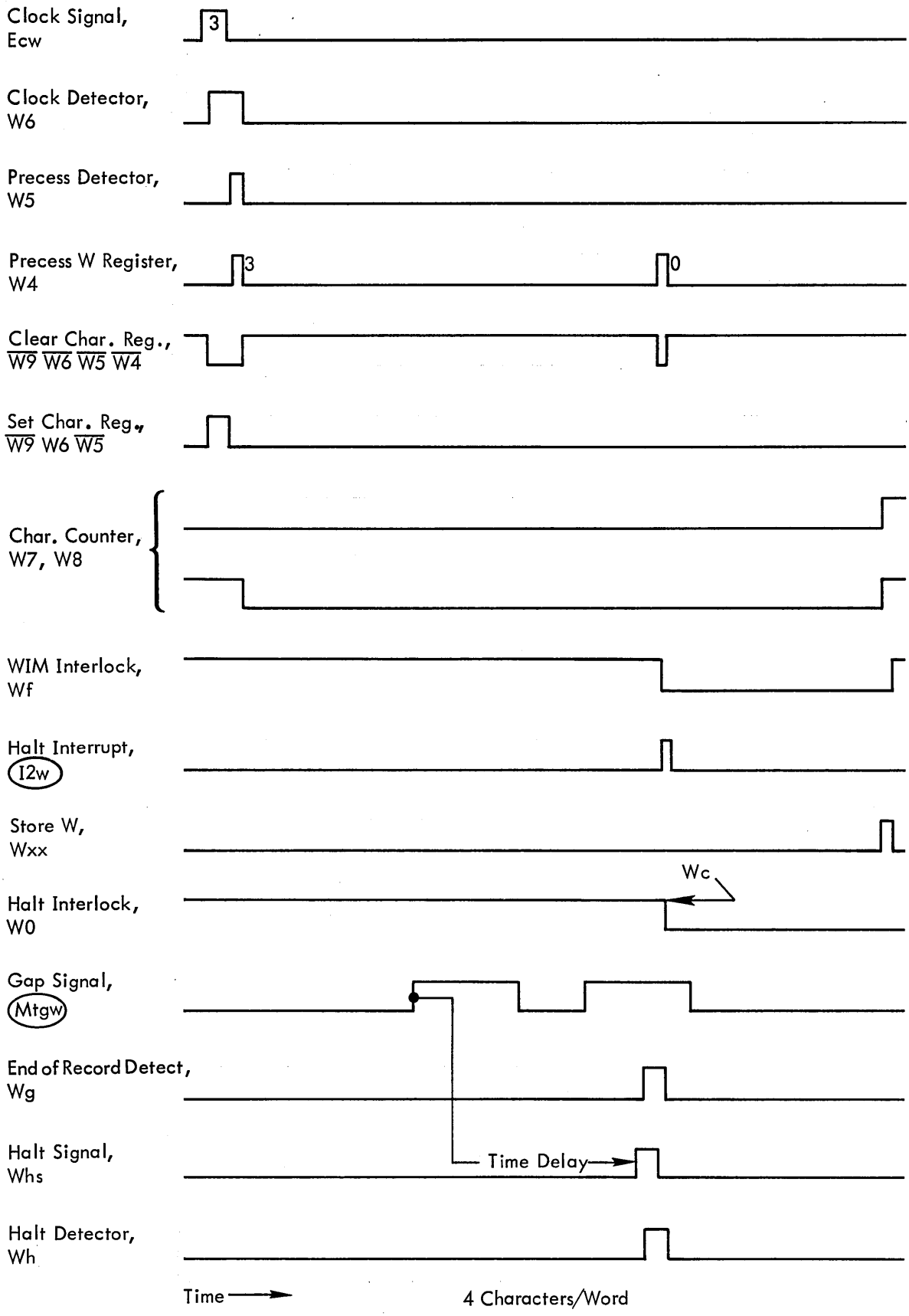

Figure 3-13. Input Termination Timing - Magnetic Tape

3.77 In the Magnetic Tape Forward Scan Timing Chart (refer to figure 3-14) and Reverse Scan Timing Chart (refer to figure 3-15), when the first interrupt informs the computer that the gap has been reached, a WIM instruction stores the last four characters read. Another EOM instruction then resets W0 to continue the scan process through the next block

$$rW0 = (Ioc\ C12\ \overline{C17}\ \overline{C19}\ \overline{C20}\ \overline{C21}\ \overline{C23})\ W9\ T0 + \ldots$$

Dotted lines indicate the reaction if the process were terminated. In case of termination, W0 allows the Tape Reader Halt Signal, Whs, to come through.

$$sWg = Whs\ \overline{T7-T0\ \overline{W10}\ \overline{W11}\ \overline{W12}\ \overline{W13}\ \overline{W14}} + \ldots$$

$$sWh = Wg\ \overline{Iwg}\ T8 + \ldots$$

Whs sets Wg, which in turn sets Wh. After Wh is set, the Character Counter Flip-Flop, W8, is no longer held on and a count-down begins.

$$sW8 = \overline{W7}\ \overline{W9}\ W10\ W11\ \overline{Wh} + \ldots$$

$$rW8 = W8\ W4\ T0 + Wc$$

This process is very similar to that described for terminating a normal read operation and Wf is reset as soon as the count-down reaches a point where W7 and W8 are both reset.

$$rWf = \overline{W7}\ \overline{W8}\ W4\ (T6 + T5)$$

A clear signal, Wc, then resets the TMCC after the four precessions.

$$Wc = Wh\ \overline{Wf}\ (T3 - T0) + \ldots$$

3.78 OUTPUT PROCESS (W9 true)

3.79 When an EOM0XXXX or EOM4XXXX instruction is executed to start an output process, an interlock signal, $\overline{Wf}$ (W0 + . . .) is immediately sent to the computer. And, if enabled, an interrupt calls for the computer to load the W-Register with the first output word. If the interrupt is disabled, the program should supply the MIW loading instruction before it is needed (i.e. before a clock signal is received from the peripheral unit).

$$rWf = Ws\ C18 + \ldots \quad \text{(denotes W register is empty)}$$

$$sW0 = Ws\ C18\ W9 + \ldots$$

$$\textcircled{Iiw} = \overline{Wf}\ W0\ \overline{Wh}\ (En + \textcircled{En})\ \overline{Iw}\ \overline{Ew}\ \overline{Iwg} + \ldots$$

3.80 Each MIW instruction, or time-share operation if interlace is being used (Wxx), exchanges the W-Register and the C-Register. Refer to figure 3-16.

$$Ww1 = \overline{W4}\ C21r\ (T7 - T0)\ Wxx + \ldots$$

$$Ww2 = \overline{W4}\ C22r\ (T7 - T0)\ Wxx + \ldots$$

$$Ww3 = \overline{W4}\ C23r\ Wxx + \ldots$$

$$sC0 = Cr3\ \overline{[(Tsr + Rx)\ Rn1 + \ldots]}$$

$$rC0 = Cr3\ \overline{[(Tsr + Rx)\ Rn1 + \ldots]}$$

similarly for C1 and C2

$$sRn1 = Rwyl\ \overline{Tsr} + Rr1\ Tsr$$

$$rRn1 = \overline{Rwyl}\ \overline{Tsr} + \overline{Rr1}\ Tsr$$

similarly for Rn2 and Rn3

$$Wxx = Rx\ Pwy + \ldots$$

(Pwy = 05 for 92200, Rx is always false for TMCC-C)

3.81 As with the input process, $\overline{Wxx}$ blocks recirculation and with W4 false precession is blocked at this time also. When precession does take place, as enabled by W4, an output character is shifted from the W-Register to the Character Register and Rwp is used to generate an odd parity bit. During the output operation the parity flip-flop operates in a manner similar to its action during input.

3.82 Rwp is initially set by Wf W5 T8. Then, when precession occurs, each octal group coming from the W-Register is examined for an odd or even number of ones. This checking is done by (Wn1 ⊕ Wn2 ⊕ Wn3) which is true whenever there are one or three ones in Wn1, Wn2, and Wn3. Each time this term is true during the checking period, Rwp is switched to its opposite state.

$$sRwp = W9\ W4\ \overline{Rwp}\ \overline{Wxx}\ (Wn1 \oplus Wn2 \oplus Wn3)\ Qw2\ (T7 - T0) + Wf\ W5\ T8\ \overline{Rwp} + \ldots$$

$$rRwp = W9\ W4\ Rwp\ \overline{Wxx}\ (Wn1 \oplus Wn2 \oplus Wn3)\ Qw2\ (T7 - T0) + \ldots$$

Qw2 is a term similar to the Qw1 used during the input process. Qw2 with (T7 - T0) establishes the pulse times during which the parity checking is done. It may either be hardwired or function with the gating signals Wx12 and Wx24 depending on the equipment model number. Refer to table 3-3.

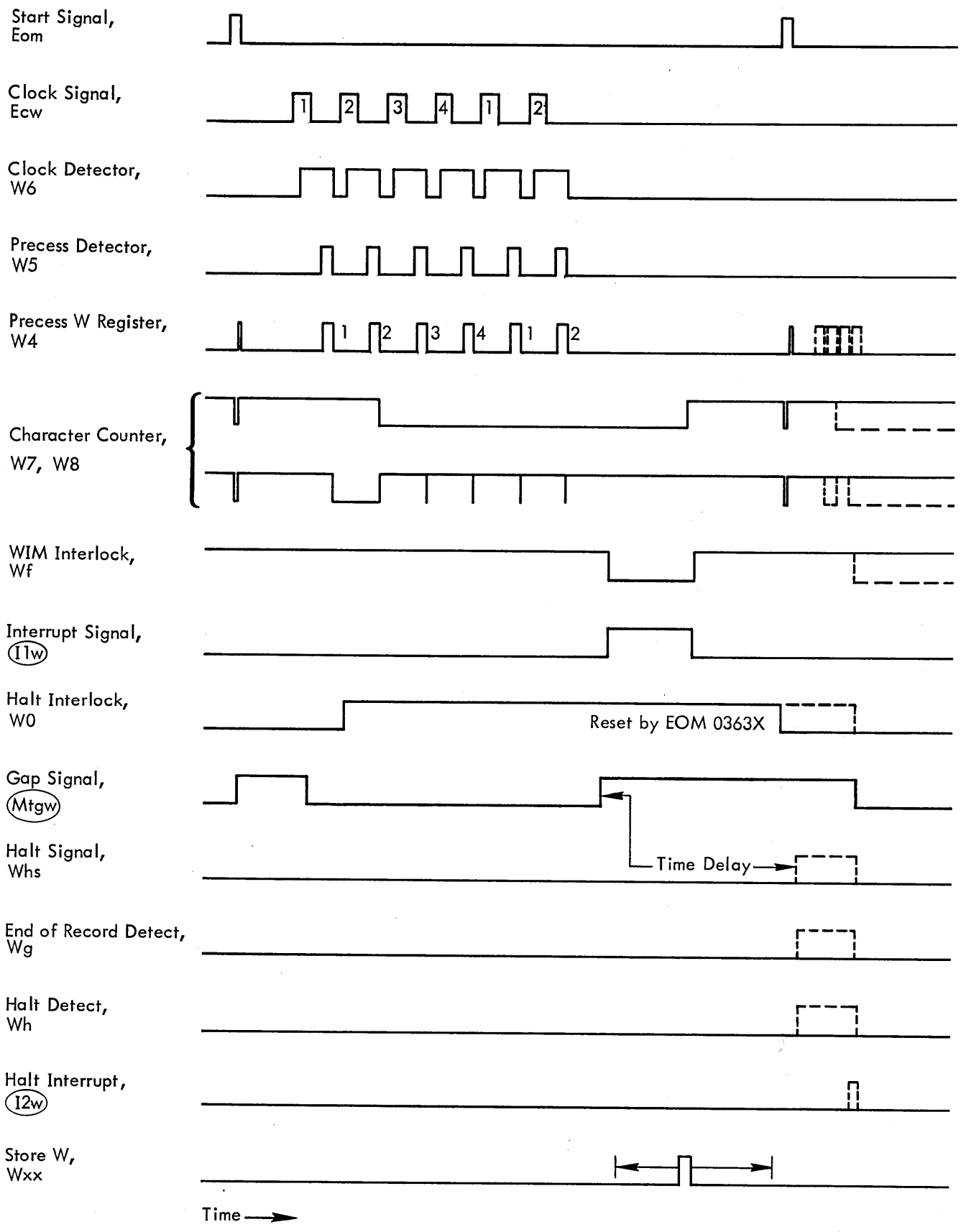

Figure 3-14. Forward Scan Timing Chart - Magnetic Tape

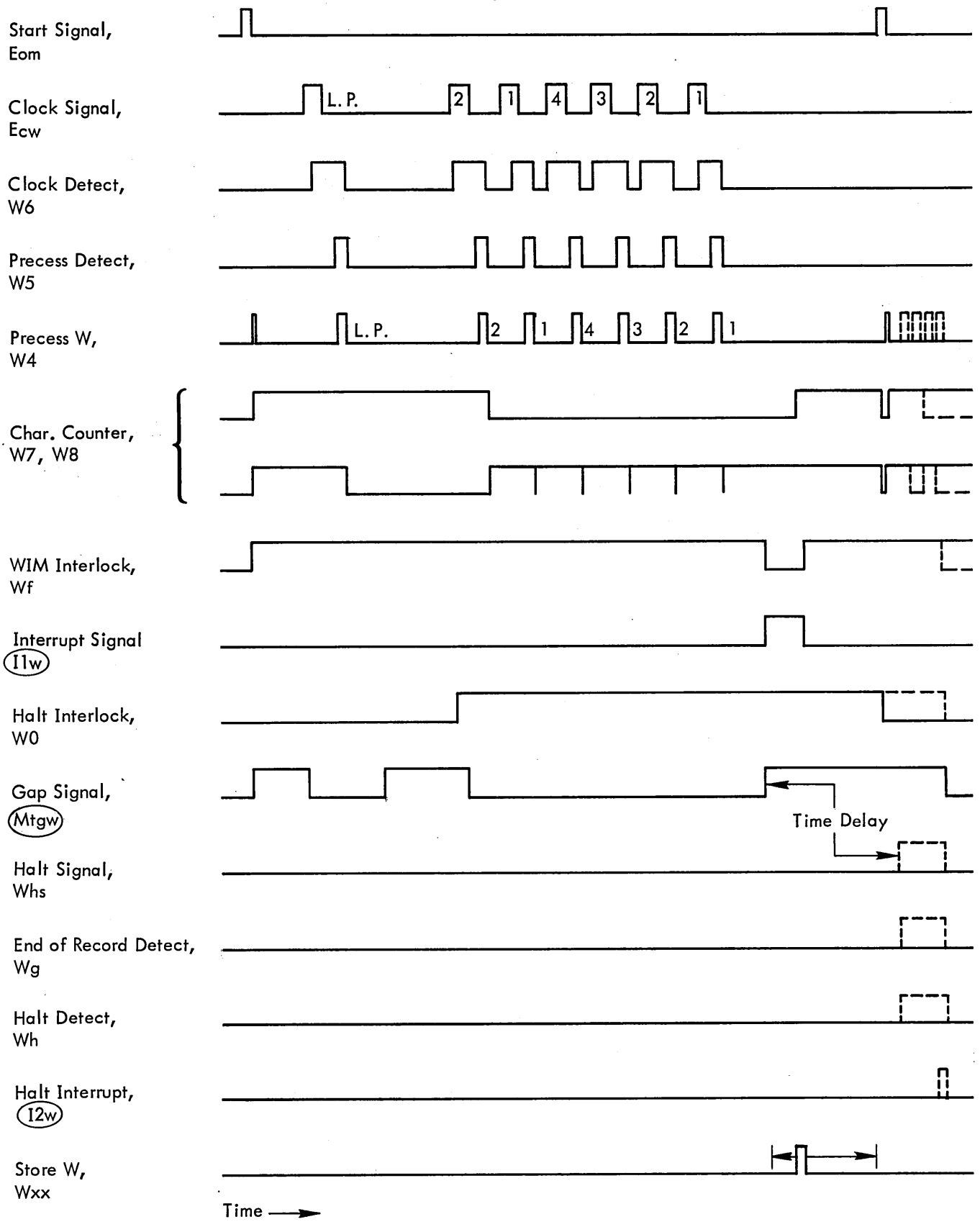

Figure 3-15. Reverse Scan Timing Chart - Magnetic Tape

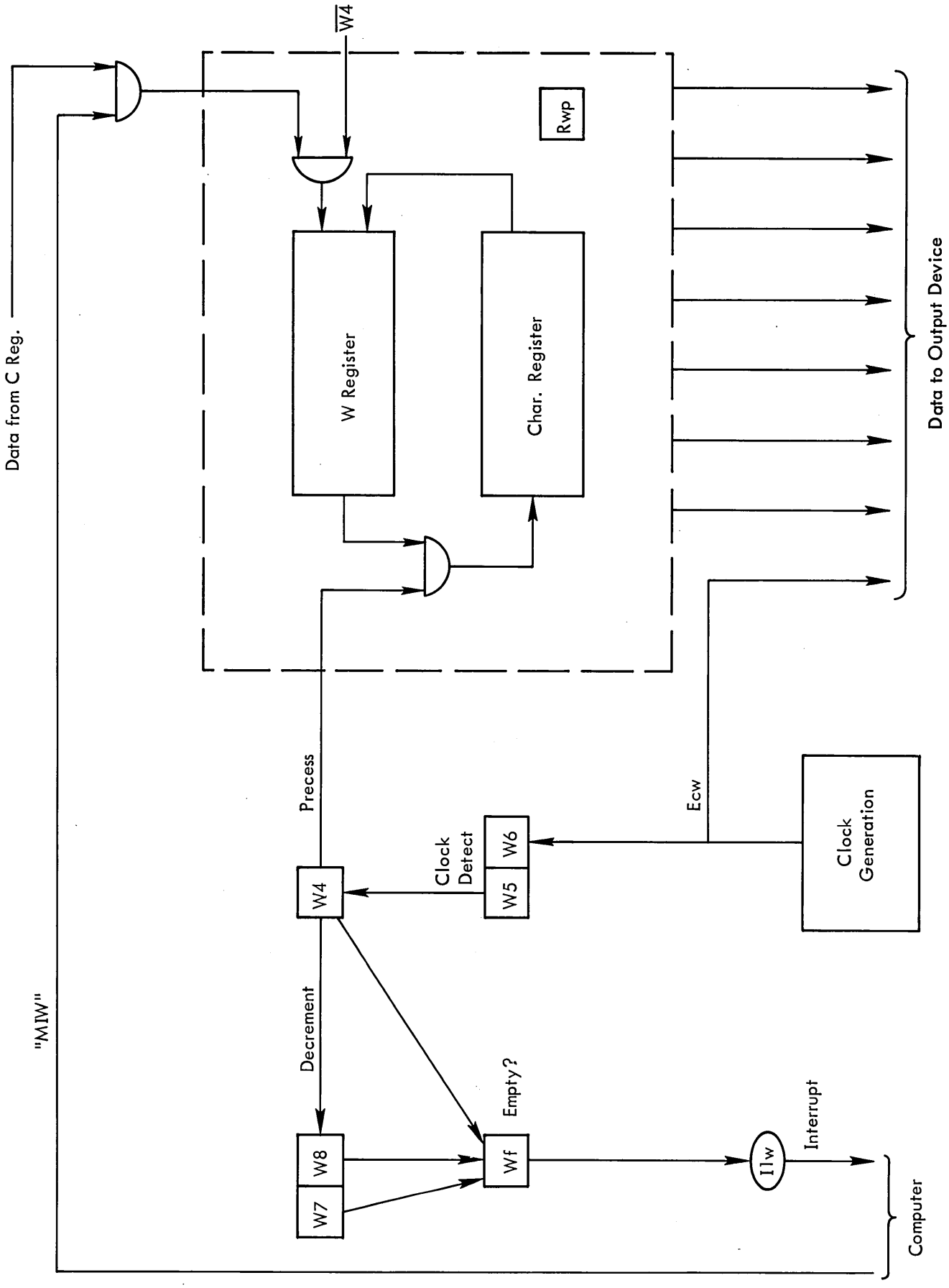

Figure 3-16. Output Information Flow Diagram

Table 3-3. Value of Qw2 Parity Timing Signal

TMCC Model No	Value of Qw2	Pulse Times When (T7 - T0) Qw2 is True
92200	$Qw2 = Qr2\ \overline{Qr4}$ *	T0, T1
92201	$Qw2 = \overline{Qr4}$ *	T3 through T0
92202	Qw2 = 1 (Qw2 is deleted)	T7 through T0
93200/93221	$Qw2 = \overline{Wx12\ Qr4 + \overline{Wx12}\ \overline{Wx24}\ \overline{Qr2}\ \overline{Qr4}}$	T0 and T1, if Wx12 and Wx24 are both off. T3 through T0, if Wx12 is on T7 through T0, if Wx24 is on

*Qw2 is replaced by the signal shown above for Models 92200/201/202.

3.83 As an example of output parity generation, consider the twelve-bit character 111 010 101 001. Rwp would start in the set condition and would then switch states three times, once for each of the octals containing an odd number of ones. Thus, Rwp would conclude its switching operation in the reset state to produce a zero parity bit for an odd parity output character.

3.84 The basic flow of the output process is illustrated in figure 3-17. The execution of the second MIW instruction is shown occurring late to depict how the Character Register is cleared when a new output character is not available. If another output character is still not available when the next clock signal, Ecw appears, the error detector (We) is set as is done during an input process.

$$sWe = W0\ \overline{W6}\ W5\ Ecw\ T8 + \ldots$$

$$rWe = Wc\ \overline{Wh}$$

3.85 In the output processes (as in the input processes), the Character Register is initially cleared by $\overline{W9}\ \overline{W6}\ \overline{W5}\ \overline{W4}$. The first output character to be read is, therefore, all zeros. This is appropriate for a leader or gap in paper tape punching. However, for some forms of output, such as typing or leaderless punching, and magnetic tape writing (the tape unit automatically generates leader), the first output character should be in the Character Register before the first clock signal. For this type of output, an EOM2XXXX instruction with a "one" bit in C13 is used. This code bit is used to set W5 which then causes the first loading of the W-Register to be followed directly by precession of the first output character into the Character Register. In this case the sequence of operations again starts by resetting Wf and setting W0 with the resulting interrupt Ilw. However, now W5 is also set by the Ws signal. Then, as usual, when the MIW instruction is executed and Rx goes true, Wf is set. With W5 on, W4 can be set at pulse time T8 just after the data transfer takes place. Figure 3-18, Output Timing Chart 2, illustrates the flow of this process.

$$sWf = Rx\ T0\ Pwy + \ldots \quad (Pwy = 05 \text{ for } 92200)$$

$$rWf = Ws\ C18 + \ldots$$

$$sW5 = Ws\ C13\ C18\ \overline{\overline{W10}\ \overline{W11}\ \overline{W12}\ \overline{W13}\ \overline{W14}} + \ldots$$

$$rW5 = W4\ T0 + Wc$$

$$sW4 = Wr\ Wf\ T8\ \overline{Wg} + \ldots$$

$$rW4 = W4\ T0 + \ldots$$

3.86 To terminate an output process, the MIW instruction which loads the last output word into the W-Register is followed by an EOM14000 instruction to reset W0. An EOM14100 instruction is used to terminate the Y channel.

$$rW0 = (Ioc\ C12\ \overline{C17}\ \overline{C19}\ \overline{C20}\ \overline{C21}\ \overline{C22}\ \overline{C23})\ W9\ T0 + \ldots$$

$$Ioc = Ioc1\ \overline{C1}\ \overline{Er}\ Qr3$$

$$Ioc1 = Eom\ \overline{C10}\ C11$$

$\overline{Er}$ is a signal inhibiting Eom and Ioc when the Interlace Prepare flip-flop (to be discussed later) has been set. The C1 bit, which appears on Ioc, indicates a W or Y channel instruction. C1 is used with the C and D channels.

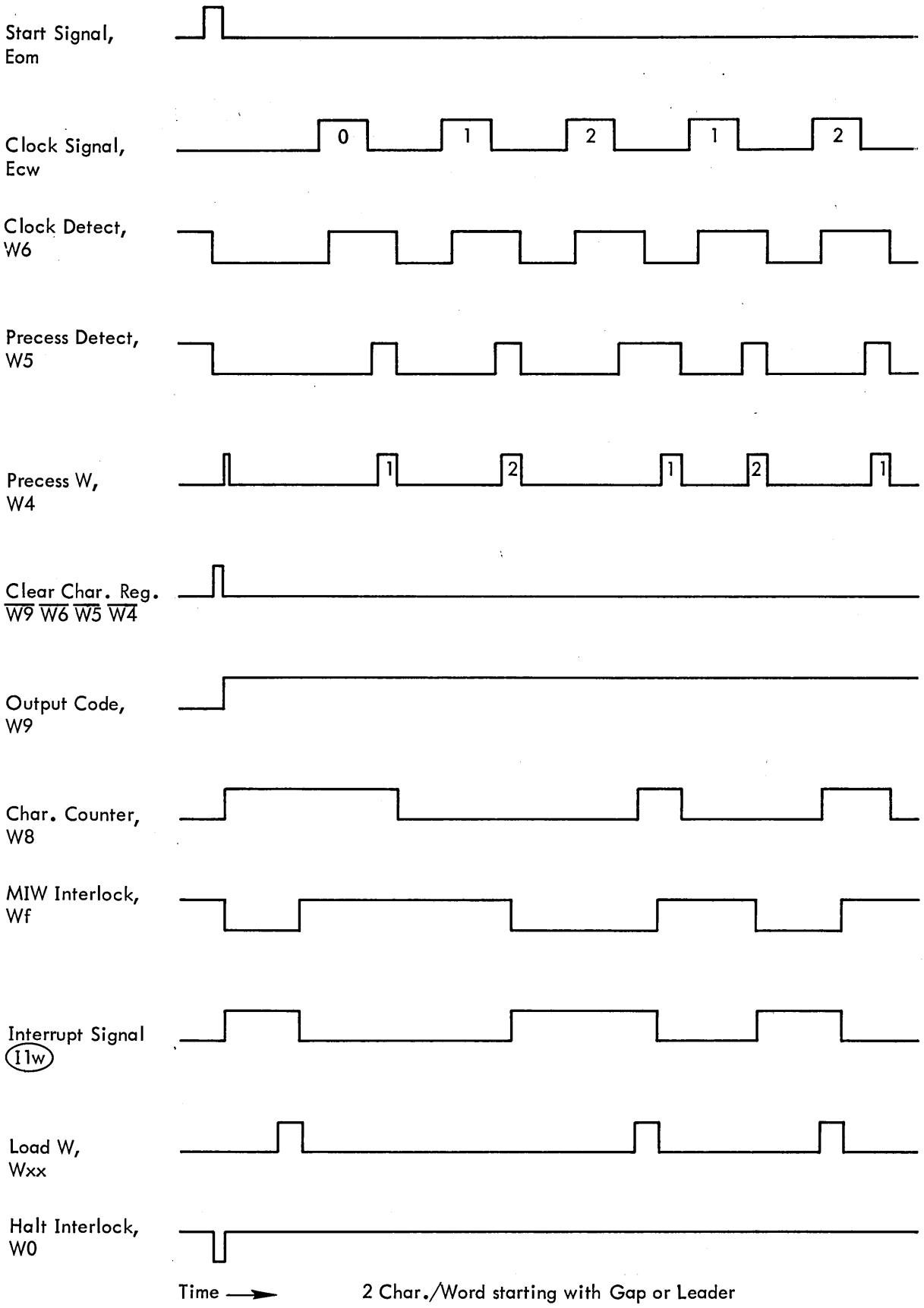

Figure 3-17. Output Timing Chart 1

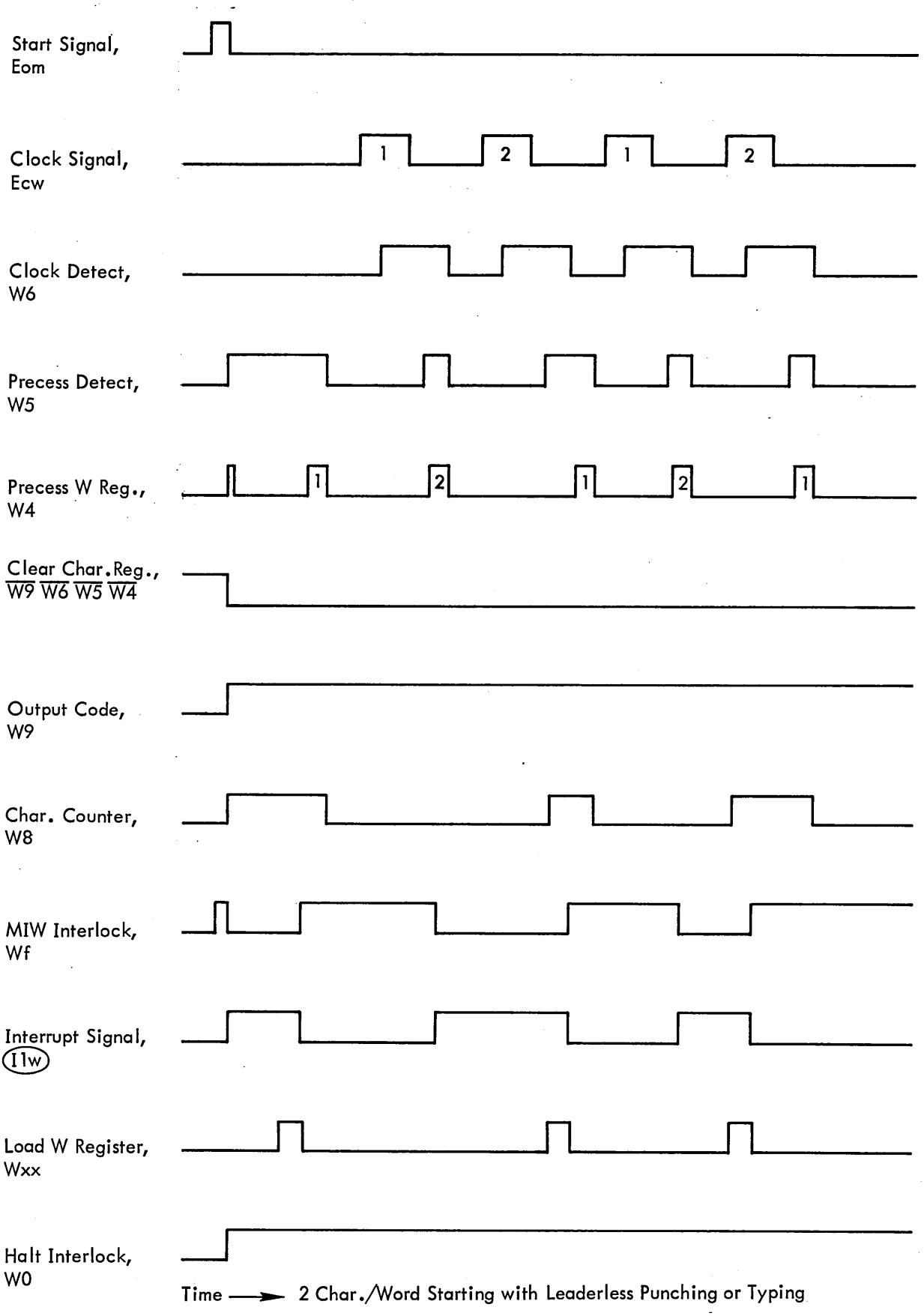

Figure 3-18. Output Timing Chart 2

3.87 Resetting of W0 results in the following: Further normal interrupt signals are blocked.

$$Iwl = \overline{Wf}\ W0\ \overline{Wh}\ (\ .\ .\ .\ )$$

Further late-load error signals are blocked.

$$sWe = W0\ \overline{W6}\ W5\ Ecw\ T8 + .\ .\ .$$

The WIM/MIW Interlock Signal Wf W0 is blocked. As a result of inhibiting the interlock and interrupt signals, no further MIW instructions are processed and, therefore, Wf is not set again after the last character is precessed into the Character Register.

$$sWf = Rx\ T0\ Pwy + .\ .\ .\quad (Pwy = 05 \text{ for } 92200)$$

$$rWf = \overline{W7}\ \overline{W8}\ W4\ (T6 + T5) + .\ .\ .$$

With Wf reset, W4 is prevented from setting after the last output character is precessed. This results in the state, $\overline{W0}\ \overline{W4}\ W5\ \overline{W6}$, following the precession.

$$sW4 = W5\ Wf\ T8\ \overline{Wg} + .\ .\ .$$

$$rW4 = W4\ T0 + W4\ T8$$

$$sW6 = \overline{W5}\ Ecw\ T8\ \overline{\overline{W10}\ \overline{W11}\ \overline{W12}\ \overline{W13}\ \overline{W14}} + .\ .\ .$$

$$rW6 = W5\ W0 + Wc$$

$$sW5 = \overline{W5}\ W6\ \overline{Ecw}\ T0 + .\ .\ .$$

$$sW5 = W4\ T0 + Wc$$

The state, $\overline{W0}\ W5\ \overline{W6}$, is used to set the halt detector unless magnetic tape is being used ($\overline{W11}$ indicates not magnetic tape).

$$sWh = W9\ \overline{W11}\ \overline{W0}\ W5\ \overline{W6}\ (\overline{Iwg} + .\ .\ .)\ T8 + .\ .\ .$$

When the output is to a magnetic tape unit, the state $\overline{W0}\ W5\ \overline{W6}$ is sent to that unit and after a suitable delay (while the tape unit generates a longitudinal parity character) a Whs halt signal is received back to set Wh.

$$sWh = Whs\ W11\ T8 + .\ .\ .$$

Regardless of the method of setting Wh to terminate an output process, the Halt Interrupt Signal, (I2w) , is generated in the cycle in which Wh is set.

$$I2w = (En + (En))\ \overline{Iwg}\ Wh\ \overline{Wf} + .\ .\ .$$

Ana a clear signal is generated.

$$Wc = Wh\ \overline{Wf}\ (T3 - T0) + .\ .\ .$$

Then Wh is reset, as well as the rest of the TMCC.

$$rWh = Wh\ \overline{Wf}\ T8 + Wc\ (T6 + T5)$$

The Output Termination Timing Charts indicate the flow of these output termination processes for devices other than magnetic tape (refer to figure 3-19) and for magnetic tape (refer to figure 3-20).

3.88 Two additional timing charts are included to illustrate the output sequences for specific devices. The flow of the complete output process for a paper tape punch operation is illustrated in figure 3-21. The EOM0XX4X start instruction causes tape leader to be punched while the device inhibits clock signals. An all zeros character is also punched for the first output clock signal. After the last output character is processed, a halt interrupt signal is generated.

3.89 The flow of an output process using magnetic tape is illustrated in figure 3-22. A time delay triggered by the EOM02X5X start instruction causes a tape gap to be recorded first while inhibiting output clock signals. $\overline{W0}\ W5\ \overline{W6}$ signals the tape unit to count three clocks and record the longitudinal parity character, and triggers a second time delay to cause a gap to be recorded after the data block. When the gap is completed, the tape unit generates a (Whs) signal to halt the output process. Each character parity and the longitudinal parity of the characters reproduced at the read head are checked by the tape unit and an error signal, (Wes) , is generated to set We for any detected errors. Several other error conditions are also checked, such as slew, amplitude, and rate error.

$$sWe = Wes + .\ .\ .$$

3.90 A special case of a magnetic tape output operation is the erase function. The tape erase is started by an EOM01X7X instruction. The erase procedure is performed in the same way as any other output to magnetic tape but the W10 bit is used by the tape unit to cause writing of all zero data regardless of what may be appearing at the character register outputs.

3.91 SYS GATE

3.92 The system control EOM instruction has little effect on the TMCC. It is included here only because the Sys signal is gated through the TMCC channel.

3.93 When an EOM instruction, containing "ones" in bits 10 and 11, is executed, an Sys signal is generated as an output from the TMCC on the Sys line.

$$Sys = Eom\ C10\ C11\ \overline{C9}$$

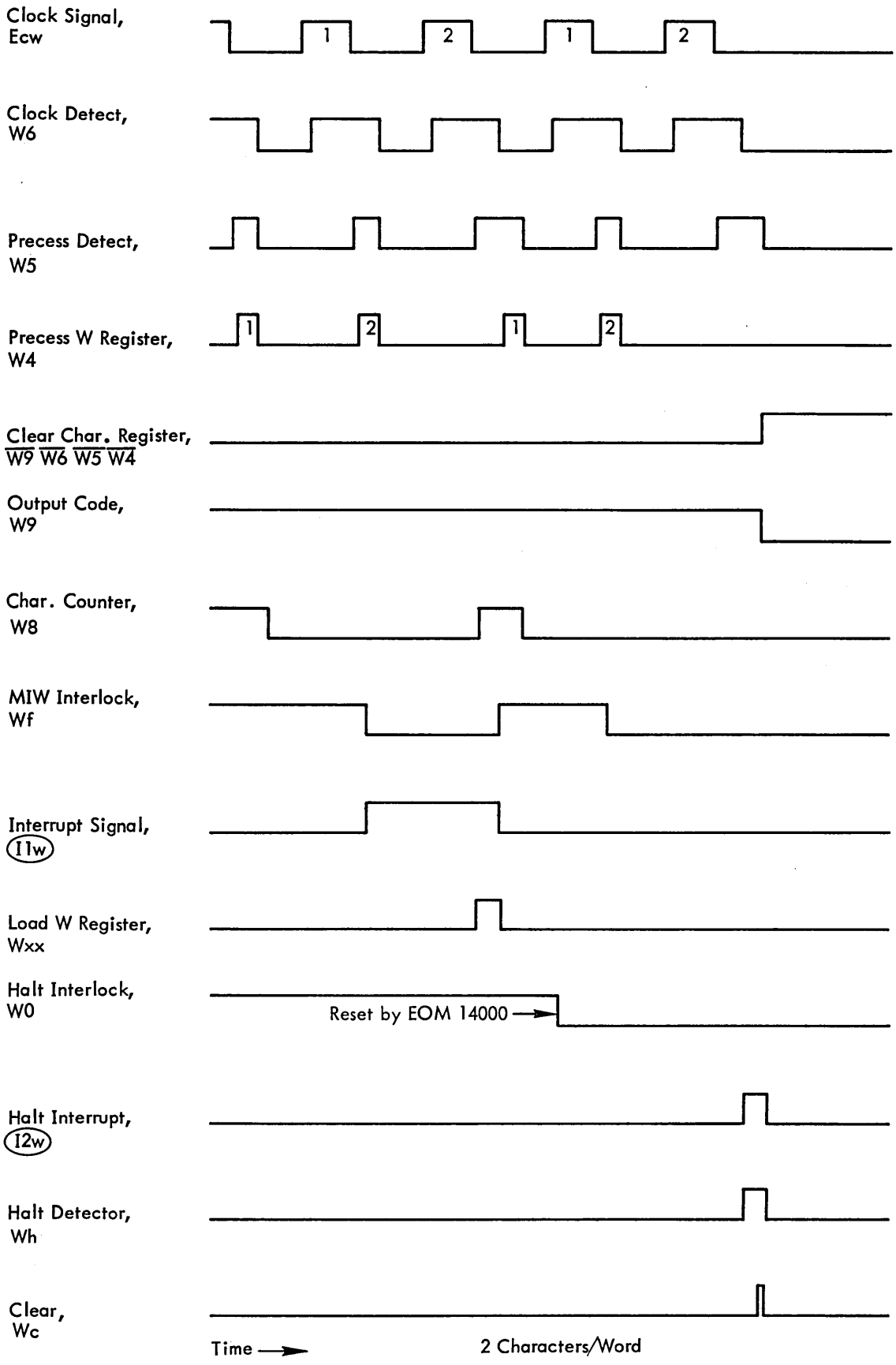

Figure 3-19. Output Termination Timing (Except Magnetic Tape)

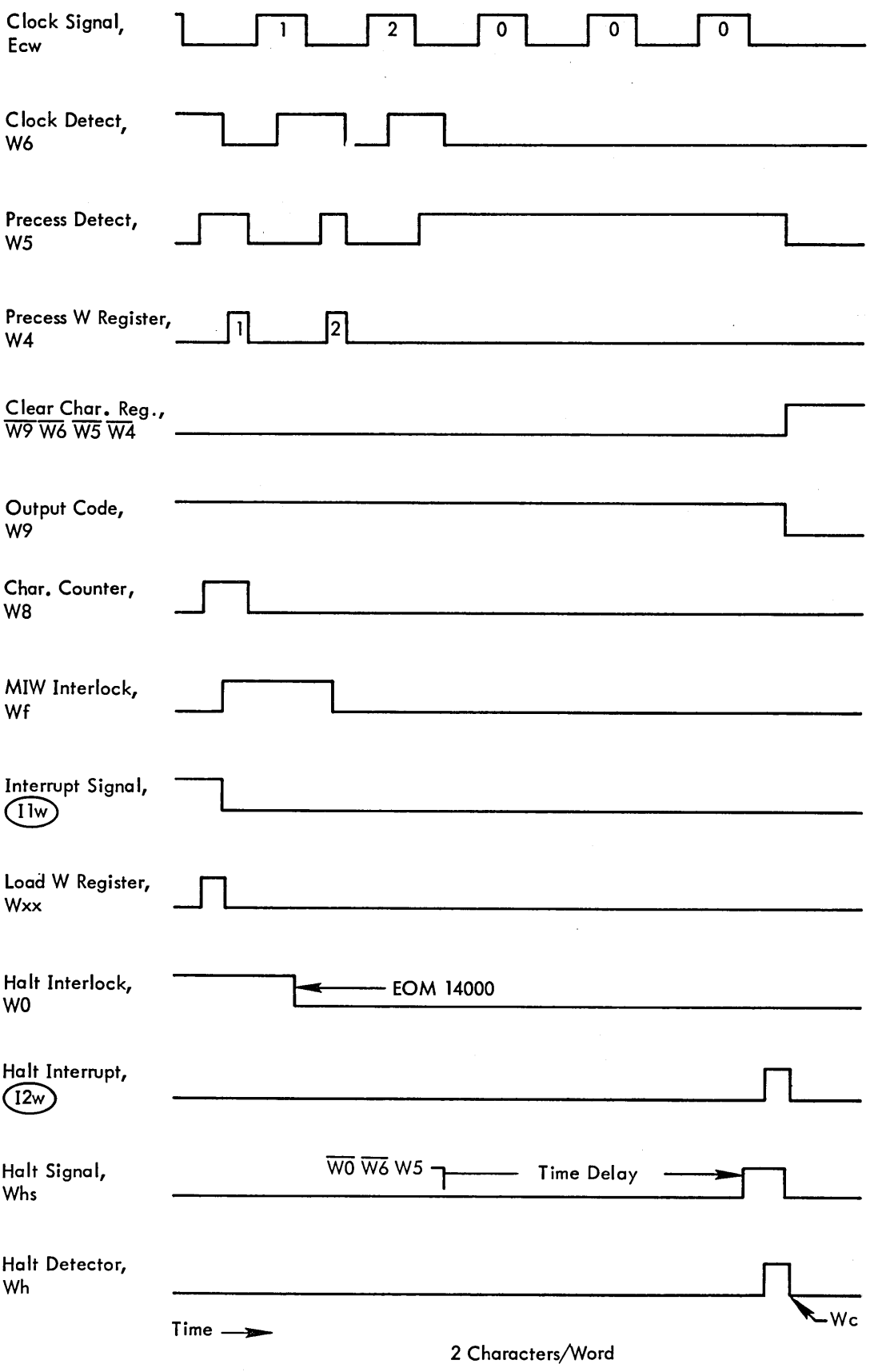

Figure 3-20. Output Termination Timing - Magnetic Tape

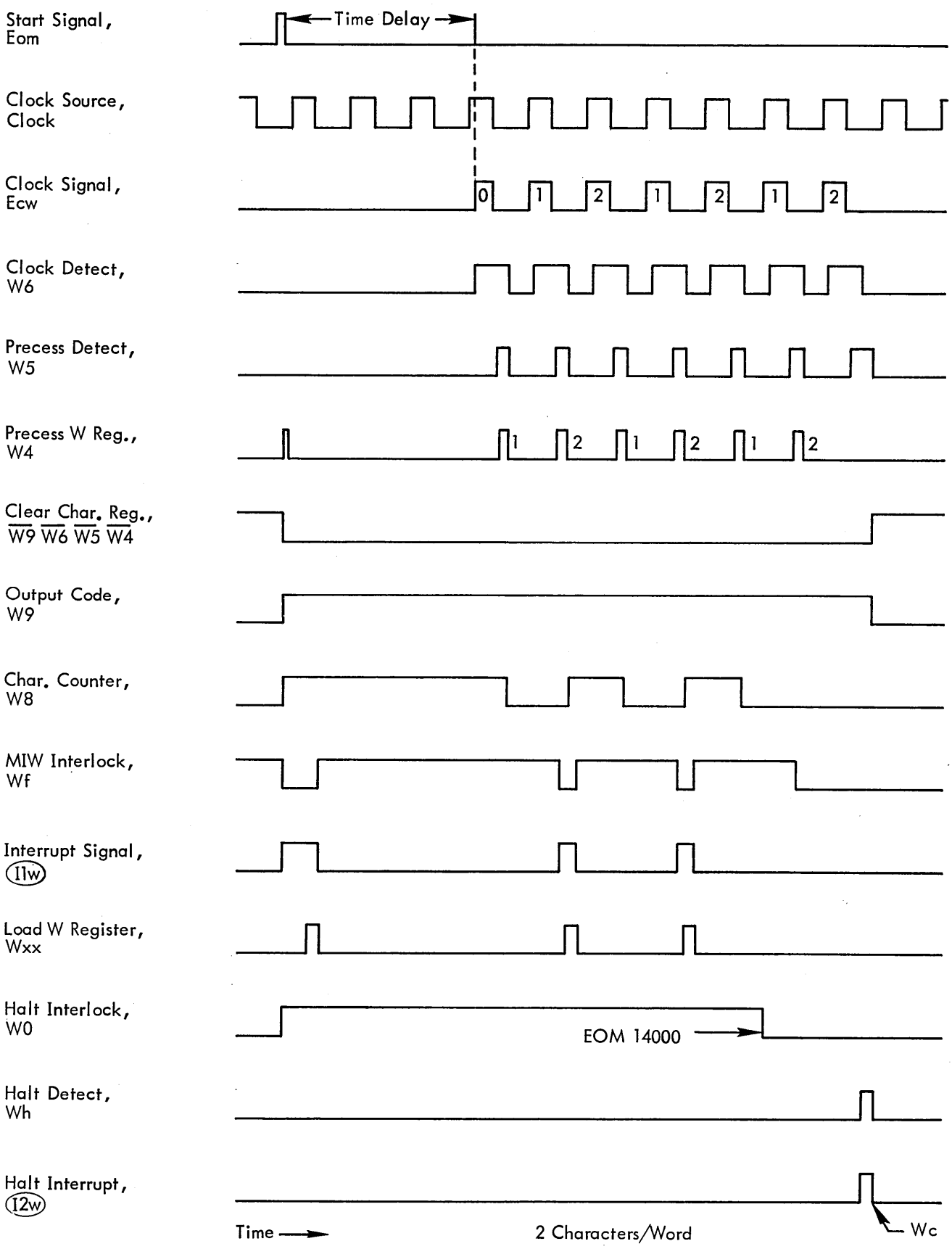

Figure 3-21. Output Timing Chart - Punch

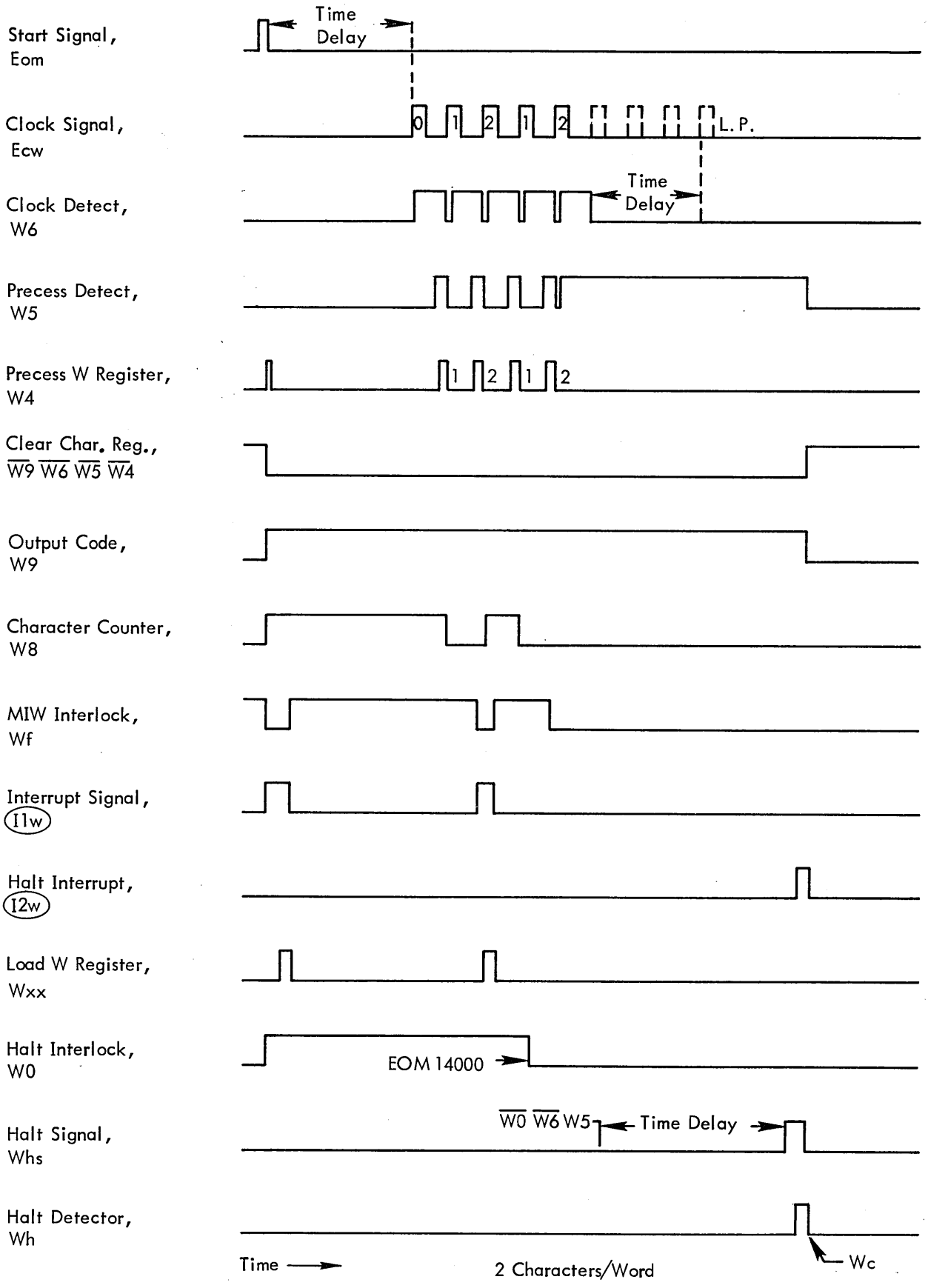

Figure 3-22. Output Timing Chart - Magnetic Tape

$$\overline{Sys} = \overline{Sys\ (T5 - T1)\ \overline{Tsr}\ Pwy}$$

(delete Pwy for 92200 and 92210)

The Sys signal may be used in conjunction with the C-Register output lines C0 through C24 to select and control special system devices. One Sys line is provided on each TMCC W (A) channel or each W(A) + Y(B) channel pair. One more Sys line is provided on the C or C + D channels (for a maximum of two lines).

3.94 SKIP GATE

3.95 The Skip Gate, Skr, and its associated line driver, /Skrz/, provide interrogation response signals for use with SKS instructions.

The equation for the line driver is:

$$/Skrz/ = \overline{Skr\ (\overline{C10\ C11\ Ssc})\ \overline{(\overline{C1}\ \overline{C9}\ \overline{C10}\ C11\ Sio)}} \ . \ . \ .*$$

*$\overline{C1}$ becomes C1 for TMCC-C and TMCC-D

This signal is inverted in the CPU and sampled during execution of an SKS instruction to determine if a response has been received. At times other than when being tested, the signal is changing levels and has no meaning. The inverse of /Skrz/ is:

$$Skrz = Skr + C10\ C11\ Sec + \overline{C1}\ \overline{C9}\ \overline{C10}\ C11\ Sio + \ . \ . \ .$$

3.96 The dashed lines indicate that other response signals may be connected to satisfy special system requirements. Sio is a response from the addressed peripheral I/O unit. The addressing is performed using SKS instruction bits 18 through 23 and the same address codes as assigned for EOM instructions. The output lines C0 through C24 provide the necessary addressing and control connections to the peripheral units. As seen above, Sio is used in conjunction with $\overline{C1}\ \overline{C9}\ \overline{C10}$ C11. Bits 1 and 9 (along with bit 17 decoded by the peripheral device) select one channel out of four TMCC and four DACC channels. Bits 10 and 11 determine the type of the SKS instruction.

3.97 Ssc is an interrogation response from external system equipment. This type of interrogation is selected by an SKS instruction with "ones" in bits 10 and 11. The control and address bits may be assigned as required. Again the C0 - C24 lines provide the necessary connections.

3.98 The remaining term in Skrz is Skr, the output of the Skip-Gate in the TMCC. The use of Skr is similar to that of Sio just described except the SKS instruction address bits (19-23) are "zeros". This causes the instruction to address the I/O channel itself rather than peripheral devices.

$$Skr = \overline{C1}\ \overline{C17}\ \overline{C9}\ \overline{C10}\ C11\ \overline{C19}\ \overline{C20}\ \overline{C21}\ \overline{C22}\ \overline{C23}\ C15\ Wsc$$
$$+ \overline{C1}\ \overline{C17}\ \overline{C9}\ \overline{C10}\ C11\ \overline{C19}\ \overline{C20}\ \overline{C21}\ \overline{C22}\ \overline{C23}\ C12\ \overline{W10}\ \overline{W11}\ \overline{W12}\ \overline{W13}\ \overline{W14}$$
$$+ \overline{C1}\ \overline{C17}\ \overline{C9}\ \overline{C10}\ C11\ \overline{C19}\ \overline{C20}\ \overline{C21}\ \overline{C22}\ \overline{C23}\ C13\ Iwf$$
$$+ \overline{C1}\ \overline{C17}\ \overline{C9}\ \overline{C10}\ C11\ \overline{C19}\ \overline{C20}\ \overline{C21}\ \overline{C22}\ \overline{C23}\ C14\ \overline{We}$$

3.99 In these equations, bits 1, 9, and 17 select one of eight channels (TMCCs and DACCs). Bits 10 and 11 determine the type of SKS instruction. "Zeros" in bits 19 through 23 address the channel rather than a peripheral unit. Bits 12, 13, 14, and 15 select the particular test function. A "one" in bit 15 tests the Signal-Complete flip-flop. Similarly, a "one" in bits 12, 13, or 14 tests the Unit Address Register, the Interlace Address Register, or the Error Flip-Flop, respectively.

3.100 Two additional TMCC channel tests, similar to two of those just described, are provided by the Skr gate. These also test the Unit Address Register and the Error Flip-Flop but with a different type of SKS instruction. This is done to provide program compatibility with the SDS 910/920 Computers.

$$Skr = C10\ \overline{C11}\ C14\ \overline{W10}\ \overline{W11}\ \overline{W12}\ \overline{W13}\ \overline{W14}\ \overline{C1} + C10\ \overline{C11}\ C20\ \overline{We}\ \overline{C1} + \ . \ . \ .$$

3.101 The equations shown in this discussion are specifically applicable to the W(A) channel TMCC. To select the other channels C1 must replace $\overline{C1}$ for channels C and D. To distinguish between W and Y or between C and D, C17 is switched (except in the last two equations where C14 and C20 are used for W and are changed to C13 and C19 for the Y channel).

3.102 INTERLACE, COMPATIBLE MODE (Time Share)

3.103 The Interlace register is enabled by a "one" in bit position 9 of either BUC or IOC type of EOM instruction. These produce Buc or Ioc signals which are derived from EOM0XXXX and EOM1XXXX instructions, respectively. Therefore, the interlace register can be enabled by the same instruction that sets up the other TMCC registers, (i.e., by Buc), or it can be enabled without disturbing the rest of the TMCC, (i.e., by Ioc). Either of the EOM instructions clears the entire interlace register then sets the Enable Flip-Flop, Ew.

Interlace Clear: $Iwc = Eom\ C9\ \overline{C10}\ \overline{C1}\ \overline{C17}\ (T3 - T0)$

$\overline{C1}$ Becomes C1 for TMCC-C

Interlace Prepare: $sEw = Iwc\ \overline{Ew}\ (T3 - T0)$

$rEw = Wc\ T0 + \ldots$

3.104 For a Buc instruction, Ew is first reset by Wc at pulse time T0 then reset during the next pulse time. The above equation for Iwc is specifically related to the W(A) channel. To select any of the other three TMCC channels, different combinations of C1 and C17 are used.

Channel	C1	C17
W(A)	0	0
Y(B)	0	1
C	1	0
D	1	1

With Ew set, the computer can preset the interlace register with the starting memory address and the word count for an I/O process. Refer to figure 3-23. The loading of these counts is accomplished by a POT instruction. The POT instruction, which produces a Pot1 signal, is ordinarily used to parallel transfer data from the C-Register to an external device. Pot1, then, produces the loading signal,

$$Iwp = Pot1\ (T6 + T5)\ Ew$$

then resets Ew,

$$rEw = Pot1\ (T3 - T0)\ Ew + \ldots$$

3.105 The Word Counter, Wc0 through Wc14, is initially cleared by Iwc which sets all stages of the counter. The one's complement of the count is then produced by resetting the counter flip-flops for corresponding "ones" in the C-Register during Iwp. Actually, this applies to only the ten least significant bits of the counter. If a word count greater than 1023 is needed, the five most significant bits of the counter must be preset by a second EOM instruction. This instruction must be executed after the Interlace is enabled and before the POT instruction is executed. An Ioc instruction, without bit 9, is given for this purpose and it generates an Iwe load signal.

$$Iwe = Ioc1\ (T6 + T5)\ Ew$$

Iwe then resets the most significant bits of the Word Counter to complete the storage of the one's complement count.

$$sWc14 = Iwc + \ldots$$

$$rWc14 = Iwp\ C9 + \ldots$$

$$sWc5 = Iwc + \ldots$$

$$rWc5 = Iwp\ C0 + \ldots$$

$$sWc4 = Iwc + \ldots$$

$$rWc4 = Iwe\ C23 + \ldots$$

$$sWc0 = Iwc + \ldots$$

$$rWc0 = Iwe\ C19 + \ldots$$

3.106 Using the one's complement, the Word Counter can count up rather than down and produce a termination signal when it contains "ones" in all of its stages. The counting is performed by triggering each stage of the counter on the falling edge of a previous stage. For example:

$$sWc13 = \overline{Ew}\ \overline{Wc13}\ \underline{Wc14\ \overline{Ew}}$$

$$rWc13 = \overline{Ew}\ Wc13\ \underline{Wc14\ \overline{Ew}}$$

where the underlined term represents the clock or triggering level. This method of counting conserves gating but produces a propagation delay through the counter. This delay is minimized to a satisfactory level with some increase in the number of gates by arranging the fifteen counter stages into five octal groups. The first stage of each group is connected to only the last stage of the previous group. An example of one octal group is:

$$sWc10 = \overline{Ec}\ \overline{Wc10}\ \underline{Wc11\ \overline{Ew}}$$

$$rWc10 = \overline{Ec}\ Wc10\ \underline{Wc11\ \overline{Ew}}$$

$$sWc9 = \overline{Ew}\ \overline{Wc9}\ Wc10\ \underline{Wc11\ \overline{Ew}}$$

$$rWc9 = \overline{Ew}\ Wc9\ Wc10\ \underline{Wc11\ \overline{Ew}}$$

$$sWc8 = \overline{Ew}\ \overline{Wc8}\ Wc9\ Wc10\ \underline{Wc11\ \overline{Ew}}$$

$$rWc8 = \overline{Ew}\ Wc8\ Wc9\ Wc10\ \underline{Wc11\ \overline{Ew}}$$

Here it is seen that for this octal group, a common clock term $\underline{Wc11\ \overline{Ew}}$ is used for all three stages.

3.107 This reduces the propagation delay for each group to the delay that would be expected for a single flip-flop. The delay for the entire fifteen stage counter is therefore equivalent to that of five flip-flop stages. The double appearance of $\overline{Ew}$ is due to the clocking arrangement and the flip-flop module layout. During the loading operations, Ew is set to allow the clock pulses to appear as the Gc4 clock for use by the flip-flop. After Ew is reset and the counting is to take place, Gc4 is held off while $\underline{\overline{Ew}.Wc14}$ performs the triggering. Refer to figure 3-24.

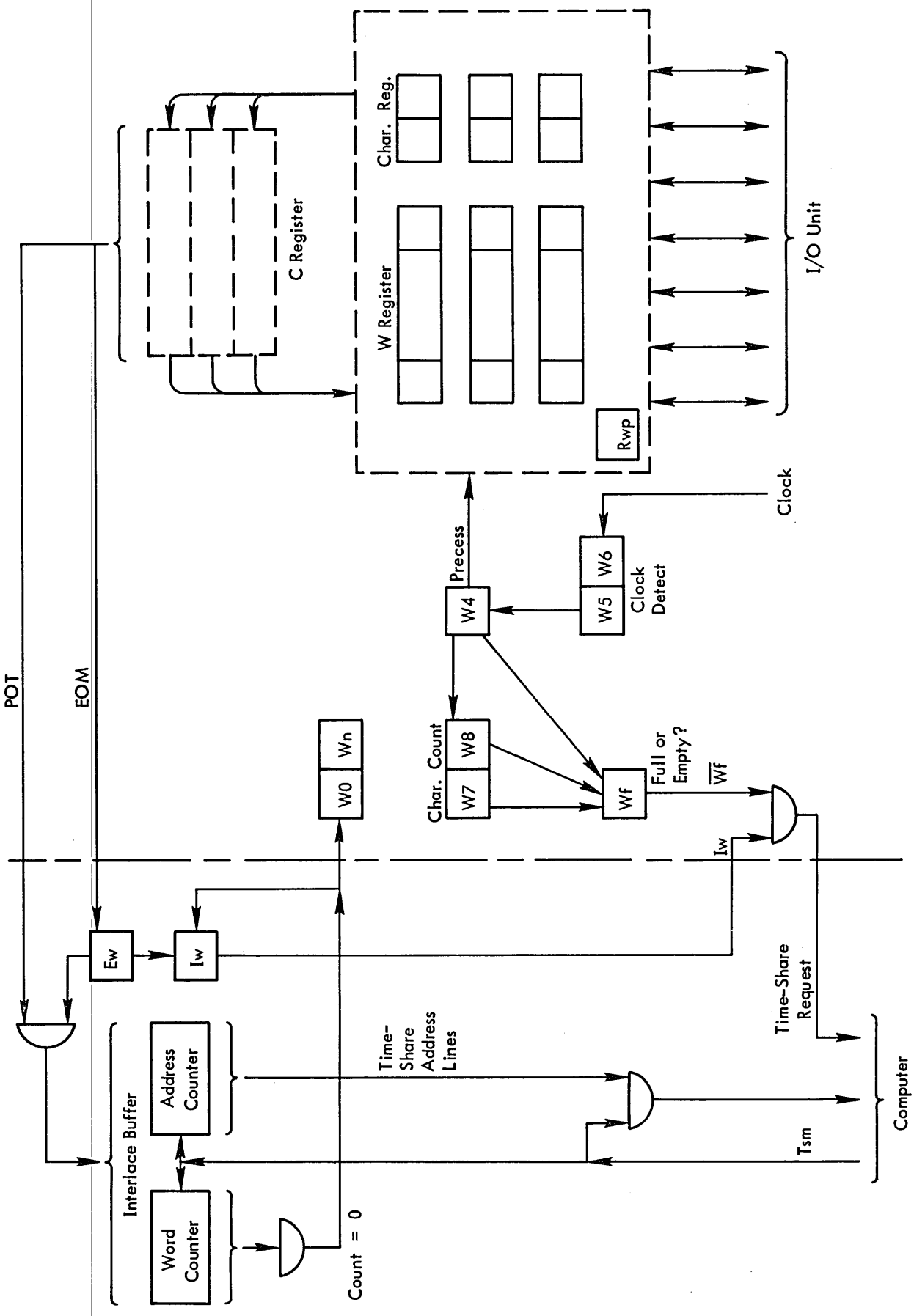

Figure 3-23. Information Flow - Interlace Operation

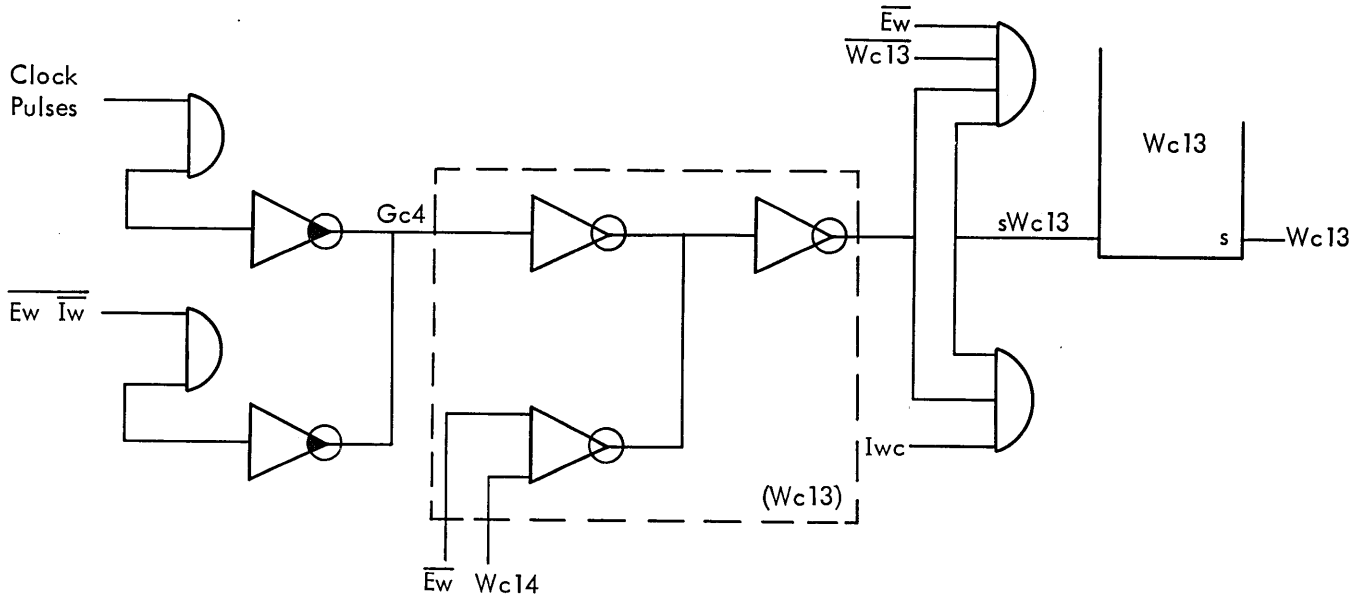

Figure 3-24. Interlace Word Counter - Typical Clock Input

3.108 The Address Counter is set up in much the same way as the Word Counter. Again the counter counts up, but in this case the one's complement is not used. With the Address Counter, the actual address of the first memory location to be used is placed in the register. As with the Word Counter, Iwc clears the counter then Iwp or Iwe sets up each stage with data from the C-Register. For some stages of the counter, the flip-flops are reset by Iwc then set with the data. For other stages, the flip-flops are set by Iwc then reset with the complement of the data. Either way, the same thing is accomplished. It was a matter of convenience in wiring for one method or the other to have been used.

3.109 The counting of the Address Counter is handled in the same way as the Word Counter. The least significant stages of both counters are triggered by Iwa $\overline{Ew}$.

$$Iwa = Rxw\ Tsm$$

Rwx is the Time Share Select Flip-Flop and is covered in detail in paragraph 3.113. Tsm is a signal from the CPU indicating that counter information for each word has been received by the CPU.

3.110 In the instruction sequence, EOM, EOM, POT, used to set up and start the interlace operation, the second EOM may be omitted if the most significant bits of the Word and Address Counters are "zeros". Refer to figure 3-25 for the relationship between the instruction bits stored in the C-Register and their respective positions in the counters.

3.111 The POT instruction which resets the Interlace Prepare Flip-Flop, Ew, also sets the Interlace Active Flip-Flop, Iw.

$$sIw = Pot\ 1\ (T3 - T0)\ Ew\ \overline{Iw}$$

Ew furnishes the ready signal required for the POT instruction. Both the Ew and Iw flip-flops inhibit W-channel interrupts.

$$Ilw = \overline{Wf}\ W0\ \overline{Wh}\ (En + \overline{En}) \overline{Iw}\ \overline{Ew}\ \overline{Iwg}$$

3.112 Refer to figure 3-26 for the timing for the interlace loading process. The Interlace Active Flip-Flop, Iw, allows the buffer to issue a time share request (Trqw) to the CPU whenever the channel needs access to memory.

$$Trqw = \overline{Wf}\ W0\ \overline{Wh}\ Iw\ \overline{Iwf}$$

Trqw is combined with similar signals from the other channels to produce a common request term for all TMCC's.

$$Trqx = Trq(c) + Trq(d)$$

$$Trq = Trqx + Trqw + Trqy$$

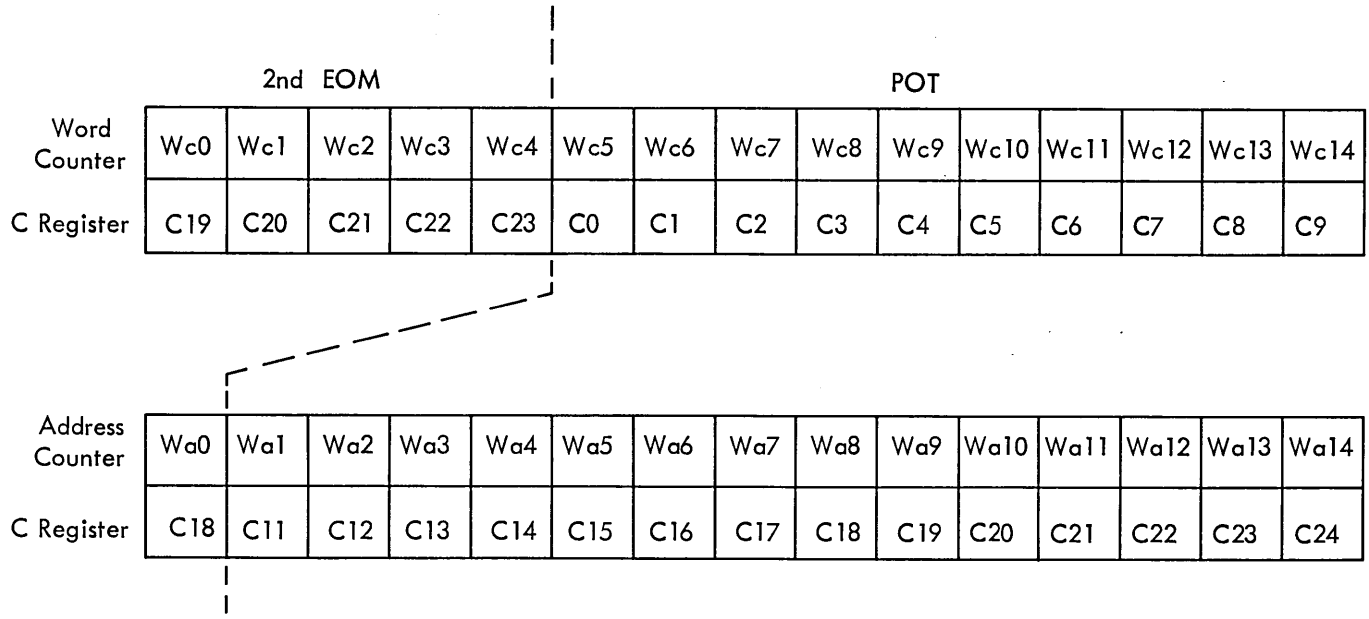

Figure 3-25. Relationship of Instruction Bits to Address and Word Counter Bits

3.113 When two or more TMCC's make a time share request at the same time or when one channel makes a request while another is already performing a time share operation, the TMCC priority logic determines which channel is allowed to access memory first. For this purpose, each channel has its own Time Share Select flip-flop. No more than one of these flip-flops may be set at any time. The priority established by the flip-flops for the four TMCC channels is D, C, Y, and W in descending order. However, once a channel has been selected, it is allowed to complete the processing of its word without being disturbed by other channels. Using the Time Share Request signals mentioned previously, the priority logic to select the channel is:

Channel W; $sRwx = \overline{Tsm}\ Trqw\ \overline{Trqy}\ \overline{Trqx}\ (T7 - T0)$

$rRwx = \overline{Tsm}\ T0$

Channel Y; $sRyx = \overline{Tsm}\ Trqy\ \overline{Trqx}\ (T7 - T0)$

$rRyx = \overline{Tsm}\ T0$

3.114 The TMCC's for the C and D channels are identical to those for the W and Y channels and so use the same logic nomenclature as above. But a request signal, Trqx, is not brought into the C and D units from other higher priority TMCC's. Then, for simplicity the C and D channel equations may be written:

Channel C, $sRcx = \overline{Tsm}\ Trq\ (c)\ \overline{Trq\ (d)}\ \overline{(T7 - T0)}$

$rRcx = \overline{Tsm}\ T0$

Channel D, $sRdx = \overline{Tsm}\ Trq\ (d)$

$rRdx = \overline{Tsm}\ T0$

The terms Rcx and Rdx are used here for clarity but do not actually appear in the logic equations for the equipment.

3.115 If a TMCC channel makes a time share request and has the highest priority of those making such a request, and if $\overline{Tsm}$ is true, then the channel can set its Time Share Select flip-flop. $\overline{Tsm}$ indicates that the CPU is not already engaged in a time share operation. Confining the discussion to the W channel, Rwx would set at pulse time Tr - T8.

3.116 The Interlace Prepare flip-flop (Ew) also produces Er which prevents output signals, Eom and Ioc, from reaching external devices while initializing the Interlace.

$$\overline{Er} = \overline{Ew}\ \overline{Ey}\ \ldots$$

$$Ioc = Ioc\ 1\ \overline{C1}\ \overline{Er}\ Qr3$$

$$\overline{\overline{Eom}} = \overline{Eom}\ \overline{Er}$$

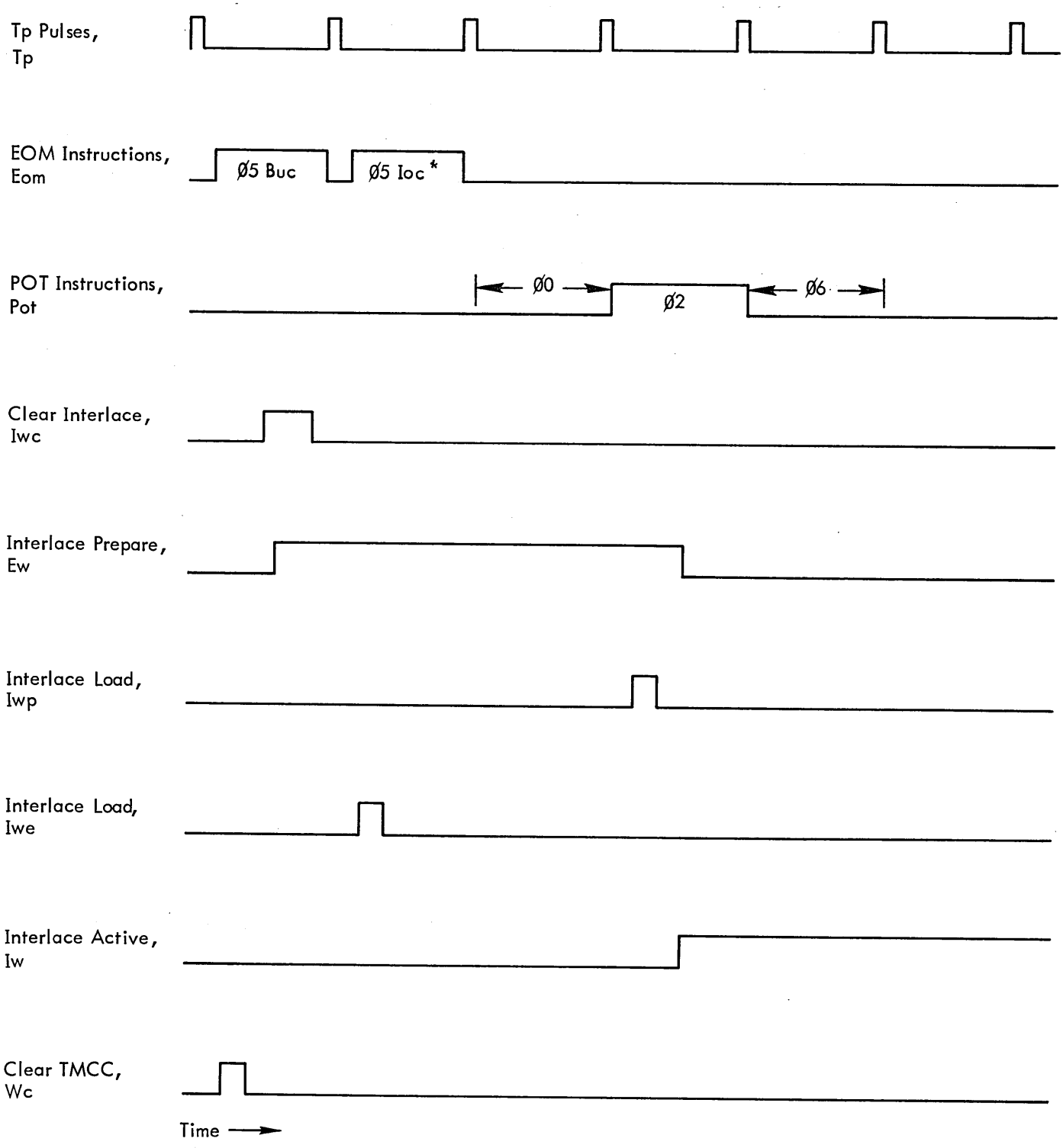

*Second EOM may be eliminated if not needed to set count in most significant bits of Address and Word Counters or to set up the extended mode.

Figure 3-26. Interlace Register Loading Timing Chart

The CPU then answers the request with a Tsr signal which remains on for two machine cycles. Tsr enables Wxx to permit a data transfer between W and C registers. While Tsr is true, the CPU sets Tsm to increment the Word and Address Counters.

$$Iwa = Rwx\ Tsm = \text{count trigger}$$

$$Wxx = Rwx\ Tsr\ Iw = \text{load buffer from C}$$

3.117 Refer to figure 3-27 for the timing of the signals involved in the data transfer between the W and C Registers. Figure 3-27, indicates that Wxx remains on for two machine cycles. This allows the data exchange to take place twice. The two cycles are used as follows.

a. Input Operation. The first cycle exchanges the input word and any word currently in the C-Register. Then between cycles, the input word is copied from the C-Register into memory (in parallel). During the second exchange cycle, the word temporarily stored in the W-Register is returned to the C-Register where it can continue in whatever function it may have been participating.

b. Output Operation. The first cycle shifts any information which was being operated on in the C-Register to the W-Register for temporary storage. The word requested by the TMCC Interlace Address Counter is then parallel transferred from memory to the C-Register (between cycles). The second exchange cycle then returns the word from the W-Register back to the C-Register and brings the word out of memory from the C to the W-Register.

3.118 The double exchange cycle thus provides the TMCC with a means of:

a. moving a word from the W-Register through the C-Register to memory or vice versa, and

b. preserving the contents of the C-Register while the transfer takes place. This is important if the CPU is engaged in some form of computation when the time share takes place. Figure 3-28 is an illustration of the timing involved for a typical interlaced I/O process.

3.119 Another important aspect of the W and C-Register data exchange during an interlaced output concerns the path taken by the output word in getting to the W-Register. If a clock has read the last word out of the Character Register when the exchange takes place, the next word is precessed simultaneously with its transfer to the W-Register. This occurs as follows. During both of the exchange cycles, Wxx is on because of Rxw and Tsr.

$$Wxx = Rwx\ Tsr\ Iw + \ldots$$

3.120 If at this time a clock has already been detected (to read the last character of the previous word) so that W5 is set, W4 is set at pulse time T8 in the beginning of the second exchange cycle.

$$sW4 = W5\ Wf\ T8\ \overline{Wg}$$

3.121 Thus, during the second cycle, Wxx and W4 are both true. The output word may then be shifted directly from the C-Register to the Character Register and on through to the W-Register. A one cycle precession is thereby automatically accomplished and the character may be read by the next clock without waiting for another precession to take place.

$$sRw1 = W4\ Wxx\ C21r + \ldots$$

$$rRw1 = W4\ Wxx\ \overline{C21r} + \ldots$$

$$sRw2 = W4\ Wxx\ C22r + \ldots$$

$$rRw2 = W4\ Wxx\ \overline{C22r} + \ldots$$

$$sRw3 = W4\ Wxx\ C23r + \ldots$$

$$rRw3 = W4\ Wxx\ \overline{C23r} + \ldots$$

$$Ww1 = W4\ Wb1\ (T7 - T0) + \ldots$$

$$Ww2 = W4\ Wb2\ (T7 - T0) + \ldots$$

$$Ww3 = W4\ Wb3 + \ldots$$

Refer to figure 3-3 for Wb1, Wb2, and Wb3.

3.122 This same path for loading the W-Register through the Character Register is also followed when the interlace is initially set up and the first word is called for, if the EOM instruction calls for starting without leader. In this case W5 is first set by Ws C13 instead of a clock signal from the peripheral unit.

$$sW5 = Ws\ C13\ C18\ \overline{W10}\ \overline{W11}\ \overline{W12}\ \overline{W13}\ \overline{W14}$$

Figure 3-29 illustrates the use of this feature in loading the first word.

3.123 When transferring data directly from the C to the Character Register, the parity bit is generated as previously described except that Cpr is used in place of (Wn1 ⊕ Wn2 ⊕ Wn3). Cpr performs a similar function but originates in the CPU and monitors the parity of the octal groups coming from the C-Register rather than from the W-Register.

$$sRwp = W9\ W4\ \overline{Rwp}\ Wxx\ Cpr\ Qw2\ (T7 - T0) + \ldots$$

$$rRwp = W9\ W4\ Rwp\ Wxx\ Cpr\ Qw2\ (T7 - T0) + \ldots$$

Refer to figure 3-4 for Qw2.

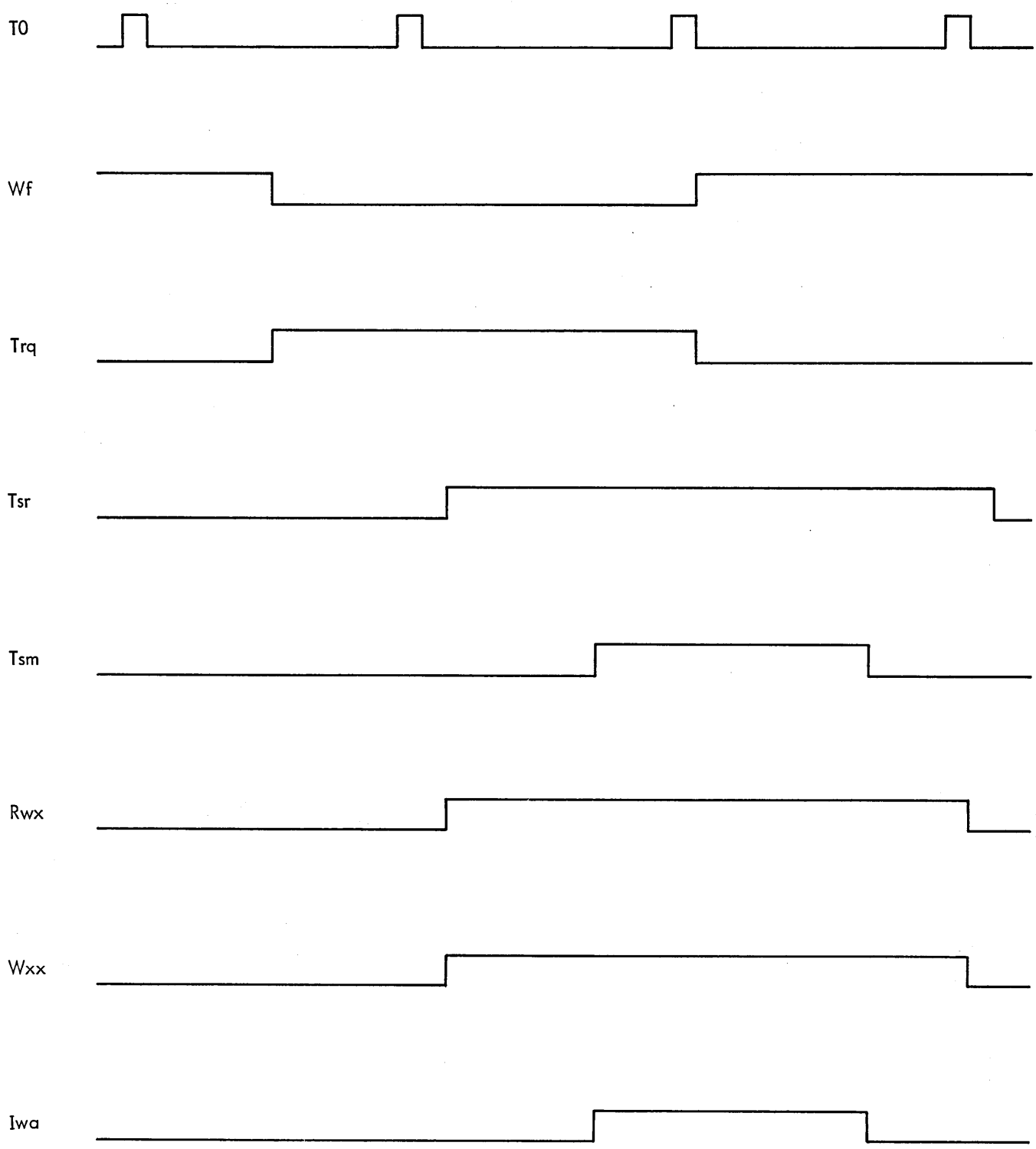

Figure 3-27. Interlace Word Transfer Timing Chart

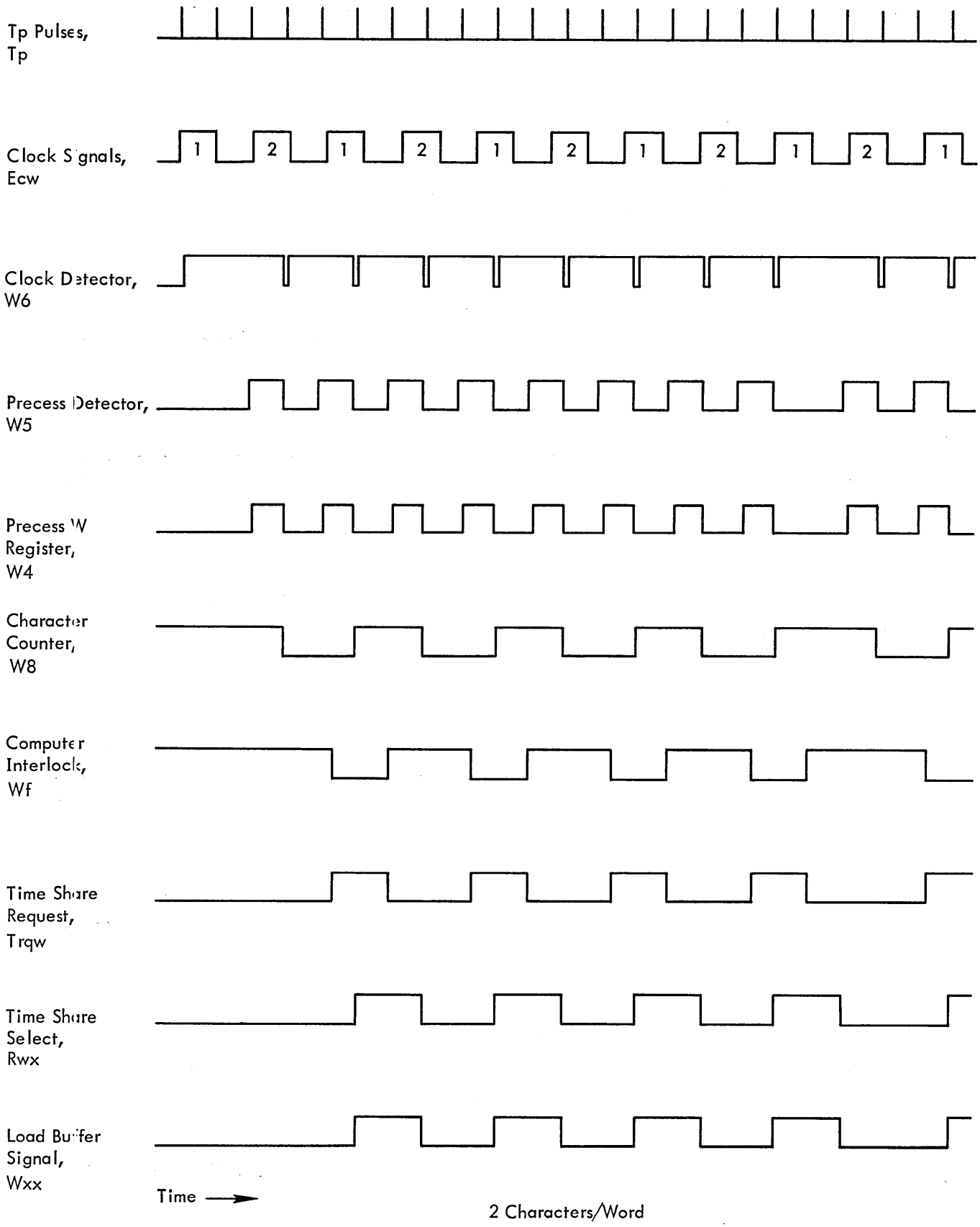

Figure 3-28. Interlace Input/Output Timing Chart

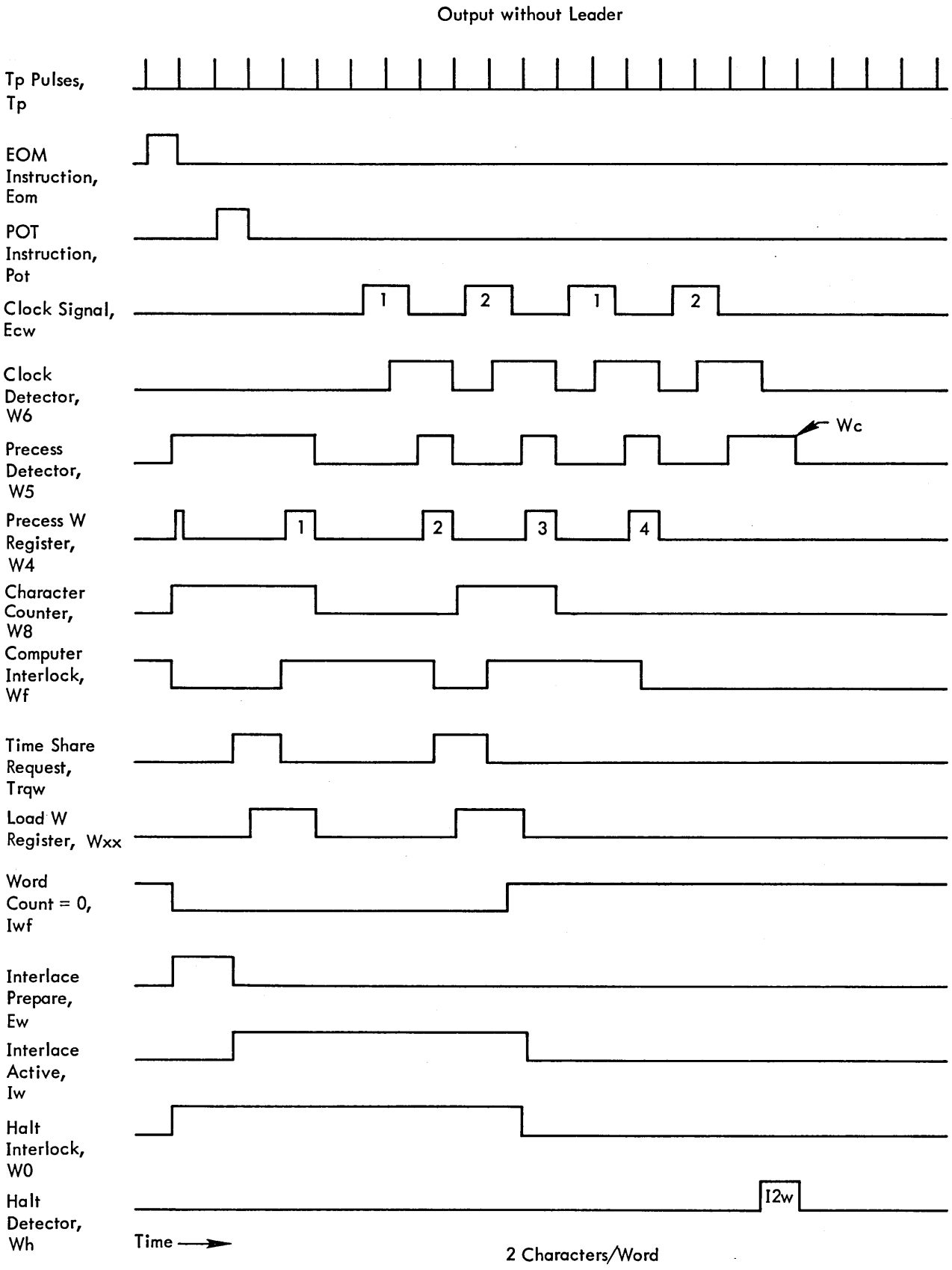

Figure 3-29. Interlace Output Timing Chart

3.124 As each I/O word is processed, the Word and Address Counters are incremented by Iwa. Iwa also sets Wf again after it has issued the time share request via Trqw.

$$Iwa = Rwx\ Tsm$$
$$sWf = Iwa\ \overline{Mit}\ T0$$

The term $\overline{Mit}$, when false, denotes that a direct access I/O channel (DACC) is accessing the memory. Since the DACC may require access during an I/O operation by the TMCC, $\overline{Mit}$ is used to momentarily stop the TMCC's action. Memory access by the DACC, although producing Tsm, thus cannot set Wf.

3.125 When the Word Counter reaches the all "ones" condition, the count is decoded by Iwf.

$$Iwf = Wc0\ Wc1\ Wc2\ Wc3\ Wc4\ Wc5\ Wc6\ Wc7\ Wc8\ Wc9\ Wc10\ Wc11\ Wc12\ Wc13\ Wc14\ \overline{Ew}$$

Iwf inhibits further time share request signals and resets the Interlace Active flip-flop.

$$Trqw = \overline{Wf}\ W0\ \overline{Wh}\ Iw\ \overline{Iwf} = \text{time share request}$$
$$rIw = Iwf\ T8 = \text{Interlace Active}$$

3.126 If the Interlace is controlling an input process, the next word loaded into the W-Register after Iw is reset, generates a Word Ready Interrupt, I1w.

$$I1w = \overline{Wf}\ W0\ \overline{Wh}\ (En + \overline{En})\ \overline{Iw}\ \overline{Ew}\ \overline{Iwg}$$

At this time the program can reload the interlace if reading is to continue. On channel W (or Y') the contents of the buffer can be stored with a WIM (or YIM) instruction.

3.127 During the input process, if an End-of-Record is encountered before the word count is completed, termination takes place as described earlier for the non-interlaced input. Wg detects the gap and sets Wh.

$$sWh = Wg\ \overline{Iwg}\ T8$$

An interrupt is generated and the TMCC is cleared in the usual manner.

$$I2w = (En + \overline{En})\ \overline{Iwg}\ Wh\ \overline{Wf} + \ldots$$

3.128 If the Interlace is controlling an output process, Iwf resets the Halt Interlock flip-flop, W0, and blocks I1w and Trqw.

$$rW0 = W9\ Iw\ Iwf\ (\overline{Iwg} + \ldots)\ \overline{(T7 - T0)}$$
$$I1w = \overline{Wf}\ W0\ \overline{Wh}\ (En + \overline{En})\ \overline{Iw}\ \overline{Ew}\ \overline{Iwg}$$
$$Trqw = \overline{Wf}\ W0\ \overline{Wh}\ Iw\ \overline{Iwf}$$

Thus, Rwx is not set again and Iwa cannot be turned on.

$$sRwx = \overline{Tsm}\ Trqw\ \overline{Trqy}\ \overline{Trqx}\ \overline{(T7 - T0)}$$
$$Iwa = Rwx\ Tsm$$

Then when the last word is precessed out of the W-Register, Wf is not set again.

$$sWf = Iwa\ \overline{Mit}\ T0$$

This results in a situation similar to that for the non-interlaced output. The condition, $\overline{W0}\ \overline{W4}\ W5\ \overline{W6}$, exists following the precession of the last character. The state, $\overline{W0}\ W5\ \overline{W6}$, then sets Wh. Or, if magnetic tape is being used, $\overline{W0}\ W5\ \overline{W6}$ is detected by the tape unit and after a delay, Whs is generated to set Wh.

$$sWh = W9\ \overline{W11}\ \overline{W0}\ W5\ \overline{W6}\ (\overline{Iwg} + \ldots)\ T8 + Whs\ W11\ T8 + \ldots$$

Then, halt interrupt and clear signals are generated and the TMCC, including Wh, is reset.

$$I2w = (En + \overline{En})\ \overline{Iwg}\ Wh\ \overline{Wf} + \ldots$$
$$Wc = Wh\ \overline{Wf}\ (T3 - T0) + \ldots$$
$$rWh = Wh\ \overline{Wf}\ T8 + \ldots$$

3.129 The termination timing for a typical interlaced input process is illustrated in figure 3-30. In general, termination of a Compatible Mode I/O process is much the same as that for a non-interlaced I/O operation, but figure 3-30 illustrates the relationship of the additional interlace signals involved with those shown in earlier figures.

3.130 As with other forms of I/O operation, a disconnect EOM (address 00) can also terminate an interlaced operation. This is done by resetting the Interlace Active Flip-Flop and the Extend Operations Flip-Flop through Ws and Wsc. (Refer to the paragraphs on Extended Mode beginning with 3-100 for explanation of Iwg.)

$$rIw = Ws\ \overline{C19}\ \overline{C20}\ \overline{C21}\ \overline{C22}\ \overline{C23}\ (T3 - T0)\ Iw + \ldots$$
$$rIwg = Wsc\ T8\ \overline{W10}\ \overline{W11}\ \overline{W12}\ \overline{W13}\ \overline{W14}\ Iwg + \ldots$$
$$sWsc = Ws\ \overline{C19}\ \overline{C20}\ \overline{C21}\ \overline{C22}\ \overline{C23} + \ldots$$

3.131 INTERLACE, EXTENDED MODE (Time Share)

3.132 The Word Counter and Address Counter set-up procedures are similar for both the Compatible and Extended

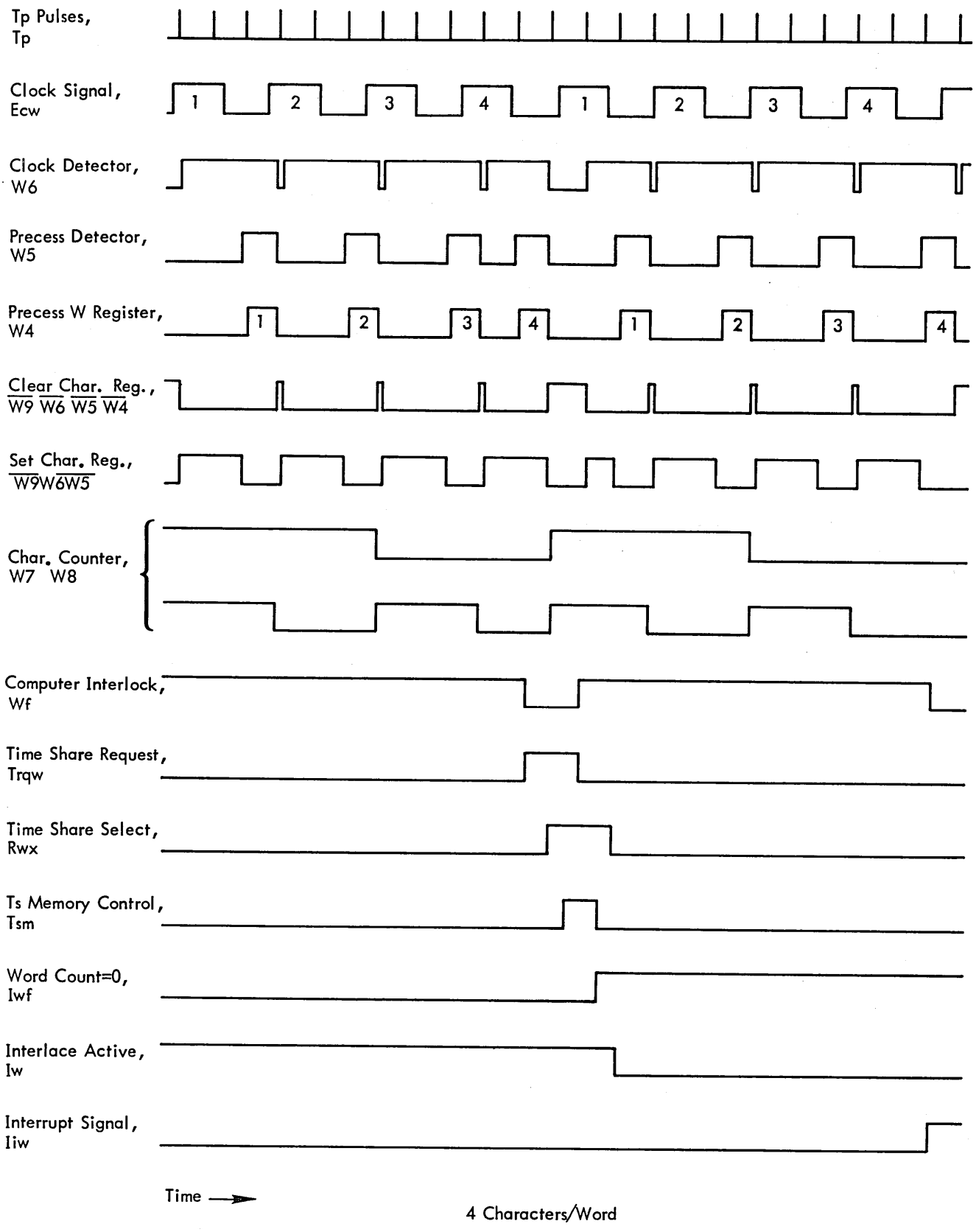

Figure 3-30. Input Termination Timing Chart - Interlace (Compatible Mode)

Modes. That is, the same sequence of instructions is used, (EOM-EOM-POT). However, to select the Extended Mode of operation, it is necessary to place a "one" in bit 12 of the second EOM (Ioc) instruction. When this instruction is processed, the Iwe loading signal sets bit 12 into the Extended Operations Flip-Flop, Iwg.

$$Iwe = Ioc\ 1\ (T6 + T5)\ Ew$$

$$sIwg = Iwe\ C12$$

Prior to this, Iwg was cleared by the first EOM instruction as was the rest of the Interlace logic.

$$Iwc = Eom\ C9\ \overline{C10}\ \overline{C1}\ \overline{C17}\ (T3 - T0)$$ $\overline{C1}$ becomes C1 for TMCC-C

$$rIwg = Iwc + \ldots$$

3.133 To use the Extended Mode, four additional flip-flops are loaded by the Ioc instruction. Two of these, Iwh and Iwi, comprise the Channel Command Register which selects the type of termination. The remaining two flip-flops, Iwj and Iwk, are employed to arm the I2w and I1w interrupts on a selective basis.

$$sIwj = Iwe\ C13$$

$$rIwj = Iwc + \ldots$$

$$sIwk = Iwe\ C14$$

$$rIwk = Iwc + \ldots$$

$$sIwh = Iwe\ C15$$

$$rIwh = Iwc$$

$$sIwi = Iwe\ C16$$

$$rIwi = Iwc$$

By decoding Iwj and Iwk, the Extended Mode can perform the four different terminal functions listed in table 3-4. Each function can be used to control either an input or an output operation. In the following paragraphs, each of the four functions is discussed in detail. In each case, it is assumed that the interlace registers have already been loaded by the EOM-EOM-POT instructions and that the interlaced I/O operation is proceeding normally.

3.134 IORD - $Iwg\ \overline{Iwh}\ \overline{Iwi}$

3.135 Output

3.136 Write C words. When C equals zero, output is terminated (i.e. the device is signaled that the last characters have been transmitted). When the peripheral device has generated the End-of-Record and, if necessary, checked the validity of the record, it sends an End-of-Record response to the channel buffer. When received by the buffer, the End-of-Record signal generates an End-of-Record interrupt (if armed) and disconnects the channel.

3.137 The line printer generates the End-of-Record response when it completes the printing of a line. If the printer encounters any print errors or faults, it sends a signal to the channel that sets the channel error indicator. This can occur since the printer has not disconnected from the channel. The IORD is useful when the program is to print several lines and the program is not otherwise to use the channel between lines. When the printer completes each line, it causes an End-of-Record interrupt (assumed to be armed), notifying the program that it can immediately transmit the next paper control instruction and the next line image.

3.138 The unbuffered card punch operates similarly. It generates the End-of-Record response after punching each row. If any faults occur during the punching of the entire card, the card punch sends a signal to the channel that sets the channel error indicator; this occurs after punching the last row (row 9).

NOTE

A program should not use IORD with devices that do not have End-of-Record conditions on output (e.g., devices such as the paper tape punch and typewriter). These devices to terminate output but give the program no indication when they receive the last characters.

After the last word is accessed from memory, zero word count is established.

3.139 The interlace is counted by the Interlace Count Trigger, Iwa.

$$Iwa = Rwx\ Tsm$$

Zero Word Count, Iwf, occurs and the Interlace Active flip-flop, Iw is reset.

$$Iwf = Wc0\ Wc1 \ldots Wc13\ Wc14\ \overline{Ew}$$

$$rIw = Iwf\ T8$$

The Halt Interlock, W0, is reset.

$$rW0 = W9\ Iw\ Iwf\ (\overline{Iwg} + \overline{Iwh} + \overline{Iwi})\ \overline{(T7 - T0)} + \ldots$$

If the End-of-Transmission Interrupt Enable, Iwk, has been previously armed, an I1w interrupt occurs and Iwk is reset.

$$I1w = Iwg\ \overline{Iw}\ Iwf\ Iwk + \ldots$$

Table 3-4. Interlace Extended - Mode Terminal Functions

Terminal Function	Iwg	Iwh	Iwi	Summary of Operation
IORD Input/Output of record then disconnect.	1	0	0	The I/O operation proceeds until the word count equals zero then terminates. On input, the channel disconnects when the End-of-Record is encountered. On output, the channel signals the device that the last character has been transmitted then disconnects after the device provides an End-of-Record response.
IOSD Input/Output until signal then disconnect.	1	0	1	The channel disconnects when the word count equals zero or at the end of a record.
IORP Input/Output of a record then proceed.	1	1	0	The I/O operation proceeds until the word count equals zero but does not terminate. On input, the channel sets the inter-record indicator when the end of a record is encountered. On output, the channel signals the device that the last character has been transmitted then sets the inter-record indicator after the device provides an End-of-Record response. The channel does not disconnect (except for magnetic tape).
IOSP Input/Output until signal then proceed.	1	1	1	When the word count equals zero, the program should either reload the interlace to continue, or terminate the operation before the next clock is received; otherwise a rate error will occur.

$$rIwk = I1w\ Iwk\ T8 + \ldots$$

When the last character of the last word has been pre-cessed into the Character Register, Wf is reset.

$$rWf = \overline{W7}\ \overline{W8}\ W4\ (T6 + T5) + \ldots$$

Because the Halt Interlock, W0, and Interlace Active, Iw, have been reset, a Time Share Request, Trqw, can not be made.

$$Trqw = \overline{Wf}\ W0\ \overline{Wh}\ Iw\ \overline{Iwf}$$

Any further clocking, Ecw, of the buffer generates a Halt Interlock Signal condition.

$$sW6 = \overline{W5}\ Ecw\ T8\ \overline{W10\ W11\ W12\ W13\ W14}$$

$$sW5 = \overline{W5}\ W6\ \overline{Ecw}\ T0 + \ldots$$

$$rW6 = W5\ T0 + \ldots$$

Halt Interlock Signal (decoded by the peripheral device)

$$= W5\ \overline{W6}\ \overline{W0}$$

If the Halt Signal, Whs, is received the Halt Detector Wh, is set and a disconnect occurs.

$$sWh = W9\ \overline{Iwh}\ T8\ Whs + \ldots$$

$$Wc = Wh\ \overline{Wf}\ (T3 - T0) + \ldots$$

$$rW9 = Wc$$

$$rW10 = Wc$$

etc.

The Signal Complete flip-flop, Wsc, is set.

$$sWsc = Wh\ \overline{Wf}\ T8 + \ldots$$

If the End-of-Record Interrupt Enable, Iwj, has been previously armed, an I2w interrupt occurs and Iwj is reset.

$$I2w = Wsc\ Iwj\ Iwg + \ldots$$

$$rIwj = I2w\ Iwj\ T8 + \ldots$$

The Extend Operations flip-flop, Iwg, and the Signal Complete flip-flop, Wsc are then reset.

$rIwg = Wsc\ T8\ \overline{W10}\ \overline{W11}\ \overline{W12}\ \overline{W13}\ \overline{W14}\ Iwg + \ldots$

$rWsc = Wsc\ \overline{Iwg}\ T8$

3.140 IOSD - $Iwg\ \overline{Iwh}\ Iwi$

3.141 Output

3.142 Write C words. When C equals zero and when the last character has been transmitted, the channel disconnects the device and becomes inactive. If an End-of-Record signal is received before the count reaches zero, the channel disconnects immediately.

NOTE

The IOSD is designed for use on devices which are normally operated on the basis of the word count only. Typewriters and paper tape devices are of this type, as are the printer and card punch when the user does not wish to stay connected until the operation is complete.

3.143 The interlace is counted by the Interlace Count Trigger, Iwa.

$$Iwa = Rwx\ Tsm$$

Zero Word Count, Iwf, occurs and the Interlace Active flip-flop, Iw, is reset.

$Iwf = Wc0\ Wc1 \ldots Wc13\ Wc14\ \overline{Ew}$

$rIw = Iwf\ T8 + \ldots$

The Halt Interlock, W0, is reset.

$$rW0 = W9\ Iw\ (\overline{Iwg} + \overline{Iwh} + \overline{Iwi})\ \overline{(T7 - T0)} + \ldots$$

If the End-of-Transmission Interrupt Enable, Iwk, has been previously armed, an I1w interrupt occurs and Iwk is reset.

$$I1w = Iwg\ \overline{Iw}\ Iwk\ Iwk + \ldots$$

$$rIwk = I1w\ Iwk\ T8 + \ldots$$

When the last character of the last word has been precessed into the Character Register, Wf is reset.

$$rWf = \overline{W7}\ \overline{W8}\ W4\ (T6 + T5) + \ldots$$

Because the Halt Interlock, W0, has been reset, a Time Share Request, Trqw, cannot be made.

$$Trqw = \overline{Wf}\ W0\ \overline{Wh}\ Iw\ \overline{Iwf}$$

Any further clocking, Ecw, of the buffer generates a Halt Interlock Signal condition.

$$sW6 = \overline{W5}\ Ecw\ T8\ \overline{\overline{W10}\ \overline{W11}\ \overline{W12}\ \overline{W13}\ \overline{W14}}$$

$$sW5 = \overline{W5}\ W6\ \overline{Ecw}\ T0 + \ldots$$

$$rW6 = W5\ T0 + \ldots$$

Halt Interlock Signal

$$= W5\ \overline{W6}\ \overline{W0}$$

For devices other than magnetic tape, the Halt Detector, Wh, sets upon reaching zero Word Count, Iwf, and after the last character has been clocked from the buffer.

$$sWh = W9\ \overline{W11}\ \overline{W0}\ W5\ \overline{W6}\ (\overline{Iwh}\ Iwi + \ldots)\ T8 + \ldots$$

The Halt Detector, Wh, also sets upon the occurrence of a Halt Signal, Whs, from the magnetic tape unit.

$$sWh = W9\ \overline{Iwh}\ Whs\ T8 + \ldots$$

The setting of the Halt Detector, Wh, initiates a buffer disconnect sequence.

$$Wc = Wh\ \overline{Wf}\ (T3 - T0) + \ldots$$

$$rW9 = Wc$$

$$rW10 = Wc$$

etc.

The Signal Complete flip-flop, Wsc, is set.

$$sWsc = Wh\ \overline{Wf}\ T8$$

If the End-of-Record Interrupt Enable, Iwj, has been previously armed, an I2w interrupt occurs and Iwj is reset.

$$I2w = Wsc\ Iwj\ Iwg + \ldots$$

$$rIwj = I2w\ Iwj\ T8 + \ldots$$

The Extend Operations flip-flop, Iwg, and the Signal Complete flip-flop, Wsc, are then reset.

$rIwg = Wsc\ T8\ \overline{W10}\ \overline{W11}\ \overline{W12}\ \overline{W13}\ \overline{W14}\ Iwg + \ldots$

$rWsc = Wsc\ \overline{Iwg}\ T8$

3.144 IORP - $Iwg\ Iwh\ \overline{Iwi}$

3.145 Output

3.146 Write C words. When the channel interlace counts C down to zero, the interlace notifies the channel buffer that it has received the last word that is to be

output; when the buffer outputs this last word, it sends a signal to the connected peripheral device indicating that the device has the last word. When the peripheral device receives, outputs and checks the validity of this last word, it sends an End-of-Record response to the channel buffer. When received by the buffer, the End-of-Record signal generates an End-of-Record interrupt (if armed) and sets the Inter-Record indicator; the channel does not disconnect.

3. 147 When the peripheral device is magnetic tape, the tape continues to move after it signals End-of-Record. As in reading tape, the signal causes the Tape Gap signal to come high. If the program executes a new write tape or erase tape EOM during the inter-gap time (approximately one millisecond), the tape remains in motion and proceeds to write or erase a new record. If the program executes no such EOM before the Tape Gap signal drops, the channel disconnects and tape comes to a stop. No interrupt occurs at this time. This is the only condition which causes a channel to disconnect automatically for an IORP.

3. 148 To proceed after the End-of-Record occurs, the program first executes a Buffer Control mode EOM to re-initialize the Channel Unit Address Register and then reloads the interlace portion of the channel (the program can alert the Interlace via the Buffer Control EOM). Otherwise, the channel immediately terminates any attempt to use its interlace portion, since the channel is still active and in the End-of-Record condition. When the program continues from an Inter-Record condition, the program should use an extended mode terminal function.

NOTE

A program should not use IORP with devices that do not generate End-of-Record responses upon output termination; such devices are paper tape and typewriter. These devices do terminate output but give the program no indication when they receive the last characters. The IORP should also not be used with the printer and card punch since these devices expect the channel to disconnect after they send EOR.

3. 149 After the last word is accessed from memory, the Interlace is counted and zero word count is established. The Interlace is counted by the Interlace Count Trigger, Iwa.

$$Iwa = Rwx\ Tsm$$

Zero Word Count, Iwf, occurs and the Interlace Active flip-flop, Iw, is reset.

$$Iwf = Wc0\ Wc1\ \ldots\ Wc13\ Wc14\ \overline{Ew}$$

$$rIw = Iwf\ T8 + \ldots$$

The Halt Interlock, W0, is reset.

$$rW0 = W9\ Iwf\ (\overline{Iwg} + \overline{Iwh} + \overline{Iwi})\ \overline{(T7 - T0)} + \ldots$$

If the End-of-Transmission Interrupt Enable, Iwk, has been previously armed, an I1w interrupt occurs and Iwk is reset.

$$I1w = Iwg\ \overline{Iw}\ Iwf\ Iwk + \ldots$$

$$rIwk = I1w\ Iwk\ T8 + \ldots$$

When the last character of the last word has been precessed into the Character Register, Wf is reset.

$$rWf = \overline{W7}\ \overline{W8}\ W4\ (T6 + T5) + \ldots$$

Because the Halt Interlock, W0, and Interlace Active, Iw, have been reset, a Time Share Request, Trqw, cannot be made.

$$Trqw = \overline{Wf}\ W0\ \overline{Wh}\ Iw\ \overline{Iwf}$$

Any further clocking, Ecw, of the buffer generates a Halt Interlock Signal condition.

$$sW6 = \overline{W5}\ Ecw\ T8\ \overline{\overline{W10}\ \overline{W11}\ \overline{W12}\ \overline{W13}\ \overline{W14}}$$

$$sW5 = \overline{W5}\ W6\ \overline{Ecw}\ T0 + \ldots$$

$$rW6 = W5\ T0 + \ldots$$

Halt Interlock Signal

$$= W5\ \overline{W6}\ \overline{W0}$$

3. 150 For non-magnetic tape devices, the buffer awaits the receipt of a Halt Signal, Whs, from the device. The End-of-Record Detector, Wg, is set.

$$sWg = Whs\ \overline{(T7 - T0)}\ \overline{\overline{W10}\ \overline{W11}\ \overline{W12}\ \overline{W13}\ \overline{W14}} + \ldots$$

The Signal Complete Detector, Wsc, sets and if the End-of-Record Interrupt Enable, Iwj, has been previously armed, an I2w interrupt is generated and Iwj is reset.

$$sWsc = Wg\ Iwg\ Iwh\ T8\ (Iwf + \ldots) + \ldots$$

$$I2w = Wsc\ Iwj\ Iwg + \ldots$$

$$rIwj = I2w\ Iwj\ T8 + \ldots$$

The device does not disconnect because Wh is not permitted to set.

3.151 For magnetic tape, the buffer awaits the receipt of a gap signal, Mtgw. The End-of-Record Detector, Wg, is set.

$$sWg = Mtgw\ T0\ Iwg\ W11\ (\overline{W0}\ W5\ \overline{W6}\ W9 + \ldots) + \ldots$$

The Signal Complete Detector, Wsc, sets and if the End-of-Record Interrupt Enable, Iwj, has been previously armed, an I2w interrupt is generated and Iwj is reset.

$$sWsc = Wg\ Iwg\ Iwh\ T8\ (Iwf + \ldots) + \ldots$$

$$I2w = Wsc\ Iwj\ Iwg$$

$$rIwj = I2w\ Iwj\ T8 + \ldots$$

The magnetic tape system can continue if the interrupt sub-routine executes an EOM to the tape within approximately one millisecond from the occurrence of the interrupt. If no EOM is executed, the tape generates a Halt Signal, Whs, and the Halt Detector, Wh, sets. The magnetic tape is disconnected and the buffer is cleared.

$$sWh = Whs\ W11\ T8 + \ldots$$

$$Wc = Wh\ \overline{Wf}\ (T3 - T0) + \ldots$$

$$rW9 = Wc$$

$$rW10 = Wc$$

etc.

$$rIwg = Wsc\ T8\ \overline{W10}\ \overline{W11}\ \overline{W12}\ \overline{W13}\ \overline{W14}\ Iwg + \ldots$$

$$rWsc = Wsc\ T8\ \overline{Iwg}$$

$$rWh = Wh\ \overline{Wf}\ T8 + \ldots$$

3.152 IOSP - Iwg Iwh Iwi

3.153 Output

3.154 Write C words. When the channel counts C down to zero, the channel generates a Count Equals Zero interrupt (if armed); the channel does not terminate output. The program should reload the interlace portion of the channel to continue writing in the same record. Failure to reload the Interlace before the buffer transmits all of the characters in its registers and before the peripheral device requests the next character from the buffer results in a rate error; this sets the Channel Error Indicator.

3.155 If the program executes a TERMINATE OUTPUT (TOP) instruction after the channel has counted C down to zero, the channel terminates the output and operates identically like the IORP from this point on.

3.156 After the last word is accessed from memory, the interlace is counted and zero word count is established.

The Interlace is counted by the Interlace Count Trigger, Iwa.

$$Iwa = Rwx\ Tsm$$

Zero Word Count, Iwf, occurs and the Interlace Active flip-flop, Iw, is reset.

$$Iwf = Wc0\ Wc1 \ldots Wc13\ Wc14\ \overline{Ew}$$

$$rIw = Iwf\ T8 + \ldots$$

If the End-of-Transmission Interrupt Enable, Iwk, has been previously armed, an I1w interrupt occurs and Iwk is reset.

$$I1w = Iwg\ \overline{Iw}\ Iwf\ Iwk + \ldots$$

$$rIwk = I1w\ Iwk\ T8 + \ldots$$

The program, upon receipt of an I1w interrupt, should reload the Interlace to permit the transmission to continue with a new set of parameters (i.e., word count, address, terminal functions, etc.). The loading of the Interlace with a zero word count could permit conversion of the current IOSP to some other terminal function, for example to an IORD, thereby effecting a disconnect.

3.157 Execution of a TERMINATE OUTPUT (TOP) instruction, e.g., EOM14000, would convert the IOSP to an IORP. The TOP instruction resets the Halt Interlock flip-flop, W0.

$$rW0 = Ioc\ C12\ \overline{C17}\ \overline{C19}\ \overline{C20}\ \overline{C21}\ \overline{C22}\ \overline{C23}\ W9\ T0 + \ldots$$

Any further clocking of the channel by Ecw generates a Halt Interlock Signal condition when the last character has been clocked from the buffer.

$$sW6 = \overline{W5}\ Ecw\ T8\ \overline{\overline{W10}\ \overline{W11}\ \overline{W12}\ \overline{W13}\ \overline{W14}}$$

$$sW5 = \overline{W5}\ W6\ \overline{Ecw}\ T0 + \ldots$$

$$rW6 = W5\ T0 + \ldots$$

$$rW5 = W4\ T0 + \ldots$$

Halt Interlock Signal

$$= W5\ \overline{W6}\ \overline{W0}$$

The Halt Interlock Signal is representative of the buffer status had the IOSP been an IORP.

3.158 IORD - $Iwg\ \overline{Iwh}\ \overline{Iwi}$

3.159 Input

3.160 Read C words. If C equals zero before the End-of-Record is detected, the rest of the record is ignored. At the End-of-Record, the peripheral device is disconnected and the channel becomes inactive.

3.161 When the W-Register acquires the specified number of characters, a Time Share Request, Trqw, is generated.

$$Trqw = \overline{Wf}\ W0\ \overline{Wh}\ Iw\ \overline{Iwf}$$

When memory is accessed, the interlace registers are counted by the Interlace Count Trigger, Iwa.

$$Iwa = Rwx\ Tsm$$

Zero Word Count, Iwf, may occur and the Interlace Active flip-flop, Iw, is reset.

$$Iwf = Wc0\ Wc1 \ldots Wc13\ Wc14\ \overline{Ew}$$

$$rIw = Iwf\ T8 + \ldots$$

If the Zero Word Count Interrupt Enable, Iwk, has been previously armed, then an I1w interrupt occurs.

$$I1w = Iwg\ \overline{Iw}\ Iwf\ Iwk + \ldots$$

$$rIwk = I1w\ Iwk\ T8 + \ldots$$

Additional characters entering the channel after Zero Word Count has been reached are precessed into the W-Register.

$$sW6 = \overline{W5}\ Ecw\ T8\ \overline{\overline{W10}\ \overline{W11}\ \overline{W12}\ \overline{W13}\ \overline{W14}}$$

$$rW6 = W5\ T0 + \ldots$$

$$sW5 = \overline{W5}\ W6\ \overline{Ecw}\ T0 + \ldots$$

$$rW5 = W4\ T0 + \ldots$$

$$sW4 = W5\ Wf\ T8\ \overline{Wg} + Iwg\ \overline{W9}\ \overline{Iwi}\ W5\ Iwf\ T8 + \ldots$$

$$sW4 = Wr\ T0 + \ldots$$

$$Ww1 = W4\ Wb1\ (T7 - T0) + \ldots$$

$$Ww2 = W4\ Wb2\ (T7 - T0) + \ldots$$

$$Ww3 = W4\ Wb3 + \ldots$$

However, Time Share Request, Trqw, is inhibited.

$$Trqw = \overline{Wf}\ W0\ \overline{Wh}\ Iw\ \overline{Iwf}$$

Parity errors cannot occur after Zero Word Count.

$$sWe = \overline{W9}\ \overline{W6}\ \overline{W5}\ \overline{W4}\ Rwp\ \overline{Wg}\ Npw\ (\overline{Iwg} + Iwi + \overline{Iwf}) + \ldots$$

Rate errors cannot set We while W4 is enabled by Iwg W9 Iwi Iw.

$$sWe = W0\ \overline{W6}\ W5\ Ecw\ T8 + \ldots$$

After Zero Word Count is established, detection of a Halt Signal or Photoreader Gap sets the End-of-Record Detector, Wg.

$$sWg = Whs\ \overline{(T7 - T0)}\ \overline{\overline{W10}\ \overline{W11}\ \overline{W12}\ \overline{W13}\ \overline{W14}} + \overline{W9}\ \overline{W10}\ \overline{W11}\ W12\ \overline{W13}\ (\overline{Rw1}\ \overline{Rw2}\ \overline{Rw3}\ \overline{Rw4}\ \overline{Rw5}\ \overline{Rw6}\ \overline{Rwp})\ W5\ \overline{(T7 - T0)}\ \overline{\overline{W10}\ \overline{W11}\ \overline{W12}\ \overline{W13}\ \overline{W14}} + \ldots$$

The Halt Detector, Wh, sets.

$$sWh = Whs\ W11\ T8 + Wg\ \overline{W9}\ \overline{W11}\ \overline{Iwh}\ Iwg\ T8\ (Iwf + \ldots) + \ldots$$

The buffer is flushed (i.e., allowed to precess without receiving input clocks until the Character Count equals zero) until it is assured that Wf is reset.

$$sW4 = Wh\ Wf\ T8 + \ldots$$

$$rWf = \overline{W7}\ \overline{W8}\ W4\ (T6 + T5) + \ldots$$

The buffer is cleared and the peripheral device disconnected.

$$Wc = Wh\ Wf\ (T3 - T0) + \ldots$$

If the End-of-Record Interrupt Enable, Iwj, has been previously armed, and End-of-Record Interrupt, Iw2, occurs.

$$sWsc = Wh\ \overline{Wf}\ T8 + \ldots$$

$$rWsc = Wsc\ T8\ \overline{Iwg}$$

$$I2w = Wsc\ Iwj\ Iwg + \ldots$$

$$rIwj = I2w\ Iwj\ T0 + \ldots$$

$$rIwg = Wsc\ Iwg\ \overline{W10}\ \overline{W11}\ \overline{W12}\ \overline{W13}\ \overline{W14}\ T8 + \ldots$$

Should an End-of-Record occur before Zero Word Count is established, the End-of-Record Detector is set.

$$\begin{aligned} sWg = {} & Mtgw\ T0\ Iwg\ W11\ (W0\ \overline{W9} + \ldots) \\ & + Whs\ \overline{(T7 - T0)}\ \overline{\overline{W10}\ \overline{W11}\ \overline{W12}\ \overline{W13}\ \overline{W14}} \\ & + \overline{W9}\ \overline{W10}\ \overline{W11}\ W12\ \overline{W13} \\ & \overline{(Rw1\ Rw2\ Rw3\ Rw4\ Rw5\ Rw6\ Rwp)}\ W5 \\ & \overline{(T7 - T0)}\ \overline{\overline{W10}\ \overline{W11}\ \overline{W12}\ \overline{W13}\ \overline{W14}} \end{aligned}$$

Any character remaining in the W-Register are flushed by W4 and a Time Share Request, Trqw, is generated.

$$\begin{aligned} sW4 = {} & Iwg\ Wg\ Wf\ W0\ \overline{Wev}\ Iw\ T8\ \overline{\overline{W7}\ \overline{W9}\ W10} \\ & \overline{W11\ \overline{Wh}} + \ldots \end{aligned}$$

where:

$$\begin{aligned} Wev = {} & W8\ Wn2\ W7\ Wn1 + \overline{W8}\ \overline{Wn2}\ W7\ Wn1 \\ & + \overline{W8}\ \overline{Wn2}\ \overline{W7}\ \overline{Wn1} + W8\ Wn2\ \overline{W7}\ \overline{Wn1} \end{aligned}$$

$$rWf = \overline{W7}\ \overline{W8}\ W4\ (T6 + T5) + \ldots$$

$$Trqw = \overline{Wf}\ W0\ \overline{Wh}\ Iw\ \overline{Iwf}$$

$\overline{\overline{W7}\ \overline{W9}\ W10\ W11\ \overline{Wh}}$ indicates that a scan operation is not taking place.

3. 162 As a result of one Time Share operation, Wf is set.

$$sWf = Iwa\ \overline{Mit}\ T0 + \ldots$$

The Character Counter is reloaded with its original count, making Wev true and the flush operation ceases.

3. 163 The Halt Detector, Wh, is now permitted to set. For Magnetic Tape operation this occurs upon receipt of a Halt Signal, Whs.

$$\begin{aligned} sWh = {} & Whs\ W11\ T8 + Wg\ \overline{W9}\ \overline{W11}\ \overline{Iwh} \\ & (Iwf + Wev\ Wf)\ T8\ Iwg + \ldots \end{aligned}$$

Before the buffer is cleared, the buffer is again flushed but a Time Share Request, Trqw, is inhibited.

$$sW4 = Wh\ Wf\ T8 + \ldots$$

$$rWf = \overline{W7}\ \overline{W8}\ W4\ (T6 + T5) + \ldots$$

$$Trqw = \overline{Wf}\ W0\ \overline{Wh}\ Iw\ \overline{Iwf}$$

The buffer is then cleared.

$$Wc = Wh\ \overline{Wf}\ (T3 - T0) + \ldots$$

If the End-of-Record Interrupt Enable, Iwj, has been previously armed, an End-of-Record Interrupt, I2w, occurs.

$$sWsc = Wh\ \overline{Wf}\ T8 + \ldots$$

$$rWsc = Wsc\ T8\ \overline{Iwg}$$

$$I2w = Wsc\ Iwj\ Iwg$$

$$rIwj = I2w\ Iwj\ T8 + \ldots$$

$$\begin{aligned} rIwg = {} & Wsc\ Iwg\ \overline{W10}\ \overline{W11}\ \overline{W12} \\ & \overline{W13}\ \overline{W14}\ T8 + \ldots \end{aligned}$$

3. 164 IOSD - $Iwg\ \overline{Iwh}\ Iwi$

3. 165 Input

3. 166 Read C words. When C equals zero or when the End-of-Record is encountered, the device is disconnected and the channel becomes inactive. If the channel disconnects because of a zero count, an EOR interrupt (if armed) is generated in addition to the count-equal-zero interrupt. If both are armed, the count-equal-zero interrupt occurs first.

When the W-Register acquires the specified number of characters, a Time Share Request, Trqw, is generated.

$$Trqw = \overline{Wf}\ W0\ \overline{Wh}\ Iw\ \overline{Iwf}$$

When memory is accessed, the interlace registers are counted by the Interlace Count Trigger, Iwa.

$$Iwa = Rwx\ Tsm$$

Zero Word Count, Iwf, may occur and the Interlace Active flip-flop, Iw, is reset.

$$Iwf = Wc0\ Wc1 \ldots Wc13\ Wc14\ \overline{Ew}$$

$$rIw = Iwf\ T8 + \ldots$$

If the zero Word Count Interrupt Enable, Iwk, has been previously armed, then an I1w interrupt occurs.

$$I1w = Iwg\ \overline{Iw}\ Iwf\ Iwk + \ldots$$

$$rIwk = I1w\ Iwk\ T0 + \ldots$$

The Halt Detector is set.

$$sWh = \overline{W9}\ \overline{W11}\ Iwg\ \overline{Iwh}\ Iwi\ Iwf\ T8\ W0 + \ldots$$

The buffer is flushed, but no Time Share Request, Trqw, may be initiated.

$$sW4 = Wh\ Wf\ T8 + \ldots$$

$$rW4 = W4\ T0 + \ldots$$

$$rWf = \overline{W7}\ \overline{W8}\ T8 + \ldots$$
$$Trqw = \overline{Wf}\ W0\ \overline{Wh}\ Iw\ \overline{Iwf}$$

The channel is cleared and the peripheral device disconnected.

$$Wc = Wh\ \overline{Wf}\ (T3 - T0) + \ldots$$

If the End-of-Record Interrupt Enable, Iwj, has been previously armed, and End-of-Record Interrupt, I2w, occurs.

$$sWsc = Wh\ \overline{Wf}\ T8 + \ldots$$
$$rWsc = Wsc\ \overline{Iwg}\ T8$$
$$I2w = Wsc\ Iwj\ Iwg + \ldots$$
$$rIwj = I2w\ Iwj\ T8 = \ldots$$
$$rIwg = Wsc\ Iwg\ \overline{W10}\ \overline{W11}\ \overline{W12}\ \overline{W13}\ \overline{W14}\ T8 + \ldots$$

Should an End-of-Record occur before Zero Word Count is established, the End-of-Record Detector is set.

$$sWg = Mtgw\ T0\ Iwg\ W11\ (W0\ \overline{W9} + \ldots) + Whs\ (\overline{T7 - T0})\ \overline{\overline{W10}\ \overline{W11}\ \overline{W12}\ \overline{W13}\ \overline{W14}} + \overline{W9}\ \overline{W10}\ \overline{W11}\ W12\ \overline{W13}\ (\overline{Rw1}\ \overline{Rw2}\ \overline{Rw3}\ \overline{Rw4}\ \overline{Rw5}\ \overline{Rw6}\ Rwp)\ W5\ (\overline{T7 - T0})\ \overline{\overline{W10}\ \overline{W11}\ \overline{W12}\ \overline{W13}\ \overline{W14}}$$

Any characters remaining in the W-Register are flushed and a Time Share Request, Trqw, is generated.

$$sW4 = Iwg\ Wg\ Wf\ W0\ \overline{Wev}\ Iw\ \overline{\overline{W7}\ \overline{W9}\ W10\ W11\ \overline{\overline{Wh}}}\ T8 + \ldots$$

where:

$$Wev = W8\ Wn2\ W7\ Wn1 + \overline{W8}\ \overline{Wn2}\ W7\ Wn1 + \overline{W8}\ \overline{Wn2}\ \overline{W7}\ \overline{Wn1} + W8\ Wn2\ \overline{W7}\ \overline{Wn1}$$

$$rWf = \overline{W7}\ \overline{W8}\ W4\ (T6 + T5) + \ldots$$
$$Trqw = \overline{Wf}\ W0\ \overline{Wh}\ Iw\ \overline{Iwf}$$

As a result of the Time Share operation, Wf, is set.

$$sWf = Iwa\ \overline{Mit}\ T0$$

When the term Wev is true the flush and store operation ceases. The Halt Detector, Wh, is permitted to set

$$sWh = Whs\ W11\ T8 + Wg\ \overline{W9}\ \overline{W11}\ \overline{Iwh}\ (Iwf + Wev\ Wf)\ T8\ Iwg + \ldots$$

Before the buffer is cleared, the buffer is again flushed but a Time Share Request, Trqw, is inhibited.

$$sW4 = Wh\ Wf\ T8 + \ldots$$
$$rWf = \overline{W7}\ \overline{W8}\ W4\ (T6 + T5) + \ldots$$
$$Trqw = \overline{Wf}\ W0\ \overline{Wh}\ Iw\ \overline{Iwf}$$

The buffer is then cleared.

$$Wc = Wh\ \overline{Wf}\ (T3 - T0) + \ldots$$

If the End-of-Record Interrupt Enable, Iwj, has been previously armed, an End-of-Record Interrupt, I2w, occurs.

$$sWsc = Wh\ \overline{Wf}\ T8 + \ldots$$
$$rWsc = Wsc\ \overline{Iwg}\ T8$$
$$I2w = Wsc\ Iwj\ Iwg + \ldots$$
$$rIwk = I2w\ Iwk\ T8 + \ldots$$
$$rIwg = Wsc\ Iwg\ \overline{W10}\ \overline{W11}\ \overline{W12}\ \overline{W13}\ \overline{W14}\ T8 + \ldots$$

3.167 Should an IOSD mode be used on input with magnetic tape devices, no disconnect will occur at Iwf. Should additional characters enter the buffer after Iwf, a rate error may occur.

$$sWe = W0\ \overline{W6}\ W5\ Ecw\ T8 + \ldots$$

Disconnect occurs upon receipt of a Halt Signal, Whs, from the magnetic tape system.

$$sWh = Whs\ W11\ T8 + \ldots$$
$$sW4 = Wh\ Wf\ T8 + \ldots$$
$$rW4 = W4\ T0 + \ldots$$
$$rWf = \overline{W7}\ \overline{W8}\ W4\ (T6 + T5) + \ldots$$
$$Wc = Wh\ \overline{Wf}\ (T3 - T0) + \ldots$$

3.168 IORP - $Iwg\ Iwh\ \overline{Iwi}$

3.169 Input

3.170 Read C words. If the channel counts C down to zero before the peripheral device encounters the End-of-Record (EOR), the channel ignores the rest of the record (to the End-of-Record). When the peripheral device sends the End-of-Record signal to the channel, the channel sets its End-of-Record Indicator; this signal sets the End-of-Record interrupt (if armed). The channel does not disconnect. The channel is now in an "Inter-Record" condition.

3.171 When the peripheral device is magnetic tape, the tape continues to move when the tape handler encounters the End-of-Record. The End-of-Record occurs when the tape read-heads encounter tape gap; this also causes a Tape Gap signal to come high. If the program executes a new read tape or scan tape EOM during the inter-gap time (approximately one millisecond while the Tape Gap signal is high), the tape remains in motion and proceeds to read or scan the next record. If the program executes no such EOM before the Tape Gap signal drops, the channel disconnects and the tape comes to a stop. No additional interrupt occurs. This is the only condition that causes a channel to disconnect automatically in an IORP.

3.172 All other input devices remain connected until the program takes further action. The paper tape reader remains in motion; the program should issue a "disconnect channel" instruction if the program is not reading any more tape. To proceed after the End-of-Record occurs, the program first executes a Buffer Control mode EOM to re-initialize the Channel Unit Address Register and then reloads the interlace portion of the channel (the program can alert the Interlace via the Buffer Control EOM). Otherwise, the channel immediately terminates any attempt to use its interlace portion since the channel is aware that it is still active and in the End-of-Record condition. When the program continues from an Inter-Record condition, the program should use an extended mode terminal function. An IORP should not be used to read with devices that do not have EOR signals (e.g., the typewriter).

3.173 When the W-Register acquires the specified number of characters, a Time-Share Request, TRQW, is generated.

$$Trqw = \overline{Wf}\ W0\ \overline{Wh}\ Iw\ \overline{Iwf}$$

When memory is accessed, the interlace registers are counted by Interlace Count Trigger, Iwa.

$$Iwa = Rwx\ Tsm$$

Zero Word Count, Iwf, may occur and the Interlace Active flip-flop, Iw, is reset.

$$Iwf = Wc0\ Wc1\ \ldots\ Wc13\ Wc14\ \overline{Ew}$$

$$rIw = Iwf\ T8 + \ldots$$

If the Zero Word Count Interrupt Enable, Iwk, has been previously armed, then an I1w interrupt occurs.

$$I1w = Iwg\ \overline{Iw}\ Iwf\ Iwk + \ldots$$

$$rIwk = I1w\ Iwk\ T8 + \ldots$$

3.174 Additional characters entering the channel after Zero Word Count has been reached are precessed into the W-Register.

$$sW6 = \overline{W5}\ Ecw\ T8\ \overline{W10\ W11\ W12\ W13\ W14}$$

$$rW6 = W5\ T0 + \ldots$$

$$sW5 = \overline{W5}\ W6\ \overline{Ecw}\ T0 + \ldots$$

$$rW5 = W4\ T0 + \ldots$$

$$sW4 = W5\ Wf\ T8\ \overline{Wg} + Iwg\ \overline{W9}\ \overline{Iwi}\ W5\ Iwf\ T8 + \ldots$$

$$rW4 = W4\ T0 + \ldots$$

$$Ww1 = W4\ Wb1\ (T7 - T0) + \ldots$$

$$Ww2 = W4\ Wb2\ (T7 - T0) + \ldots$$

$$Ww3 = W4\ Wb3 + \ldots$$

However, Time Share Requests, Trqw, are inhibited.

$$Trqw = \overline{Wf}\ W0\ \overline{Wh}\ Iw\ \overline{Iwf}$$

Parity and rate errors cannot occur after Zero Word Count.

$$sWe = \overline{W9}\ \overline{W6}\ \overline{W5}\ \overline{W4}\ Rwp\ \overline{Wg}\ Npw\ (\overline{Iwg} + Iwi + \overline{Iwf}) + W0\ W5\ \overline{W6}\ Ecw\ T8 + \ldots$$

Detection of magnetic tape gap, photoreader gap or a halt signal sets the End-of-Record Detector.

$$sWg = Mtgw\ T0\ Iwg\ W11\ (W0\ \overline{W9} + \ldots) + Whs\ \overline{(T7 - T0)}\ \overline{W10\ W11\ W12\ W13\ W14} + \overline{W9}\,\overline{W10}\,\overline{W11}\,W12\,\overline{W13}\,(\overline{Rw1}\ \overline{Rw2}\ \overline{Rw3}\ \overline{Rw4}\ \overline{Rw5}\ \overline{Rw6}\ \overline{Rwp})\ W5\ \overline{(T7 - T0)}\ \overline{W10\ W11\ W12\ W13\ W14}$$

If the End-of-Record Detector is set before Zero Word Count has occurred, then the buffer is flushed and the completed word is stored in memory.

$$sW4 = Iwg\ Wg\ Wf\ W0\ \overline{Wev\ Iw\ \overline{W7}\ \overline{W9}\ W10\ W11\ \overline{Wh}}\ T8 + \ldots$$

$$rW4 = W4\ T0 + \ldots$$

where:

$$Wev = W8\ Wn2\ W7\ Wn1 + \overline{W8}\,\overline{Wn2}\,W7\ Wn1 + \overline{W8}\ \overline{Wn2}\ \overline{W7}\ \overline{Wn1} + W8\,Wn2\,\overline{W7}\,\overline{Wn1}$$

Wf is reset and Time Share Request is inhibited.

$$rWf = \overline{W7}\,\overline{W8}\,W4\,(T6 + T5) + \ldots$$

$$Trqw = \overline{Wf}\,W0\,\overline{Wh}\,Iw\,\overline{Iwf}$$

$$sWf = Iwa\,\overline{Mit}\,T0 + \ldots$$

If Wg is set, Wsc is set after the buffer is flushed or immediately if Zero Word Count exists.

$$sWsc = Wg\,Iwg\,Iwh\,(Wev\,Wf + Iwf)\,T8 + \ldots$$

$$rWsc = Wsc\,\overline{Iwg}\,T8$$

If the End-of-Record Interrupt Enable, Iwj, has been previously armed, an I2w interrupt occurs.

$$I2w = Wsc\,Iwj\,Iwg + \ldots$$

$$rIwj = I2w\,Iwg\,T8 + \ldots$$

3.175 In general, the buffer does not disconnect, as the Halt Detector has not been set. For magnetic tape operation, a new EOM may be given within 0.75 millisecond from the occurrence of I2w to permit the magnetic tape system to proceed to a new record. In the case of magnetic tape, failure to give an EOM results in the tape stopping and the buffer disconnecting.

$$sWh = Whs\,W11\,T8 + \ldots$$

The buffer is flushed but not stored as Trqw is inhibited.

$$sW4 = Wh\,Wf\,T8 + \ldots$$

$$rW4 = W4\,T0 + \ldots$$

$$rWf = \overline{W7}\,\overline{W8}\,W4\,(T6 + T5)$$

$$Trqw = \overline{Wf}\,W0\,\overline{Wh}\,Iw\,\overline{Iwf}$$

The buffer is cleared.

$$Wc = Wh\,\overline{Wf}\,(T3 - T0) + \ldots$$

3.176 IOSP - Iwg Iwh Iwi

3.177 Input

3.178 Read C words. If the channel counts C down to zero before the peripheral device encounters the End-of-Record, the channel generates a Count Equals Zero interrupt (if armed). The program should reload the interlace portion of the channel to continue reading the record. As far as the peripheral device knows, nothing happens at this time. Failure to reload the Interlace before the peripheral device sends enough characters to overfill the channel buffer causes a rate error; this sets the channel error indicator.

3.179 When the peripheral device encounters the End-of-Record, IOSP operates identically like the IORP command. An IOSP is identical to an IORP in operation except that when Zero Word Count occurs it is anticipated that the interlace will be reloaded. Failure to reload the interlace in time results in rate errors. Parity error detection is not inhibited after Zero Word Count.

$$sWe = \overline{W9}\,\overline{W6}\,\overline{W5}\,\overline{W4}\,Rwp\,\overline{Wg}\,Npw\,(Iwi + \ldots)$$

$$+ W0\,\overline{W6}\,W5\,Ecw\,T8 + \ldots$$

3.180 PIN ADDRESS COUNTER

3.181 The PIN Address Counter flip-flop allows a PIN instruction to interrogate the Interlace Address Counter. The flip-flop is set by an I/O Unit Control instruction EOM (Ioc) in which the address bits are "zeros" and bit 13 is a "one". Bit 17 of the instruction selects either the W or Y channel TMCC.

$$sWpa = Ioc\,\overline{C17}\,C13\,\overline{C19}\,\overline{C20}\,\overline{C21}\,\overline{C22}\,\overline{C23}\,T0$$

The Ioc signal indicates that an I/O control instruction is being processed and also distinguishes between the W - Y channels and the C - D channels.

$$Ioc = Ioc\,1\,\overline{C1}\,\overline{Er}\,Qr3$$

$\overline{C1}$ becomes C1 for TMCC-C & D

$$Ioc\,1 = Eom\,\overline{C10}\,C11$$

3.182 After Wpa is turned on, the Interlace Memory Address Counter flip-flops are gated to the CPU via the parallel input lines (Cd0) - (Cd23). For this purpose, only fifteen of the lines are required.

$$(Cd9) = (Wa0\,Wpa)\,(Ya0\,Ypa) + \ldots$$

$$(Cd23) = (Wa14\,Wpa)\,(Ya14\,Ypa) + \ldots$$

The dotted lines indicate other parallel signals may be connected to the same lines.

3.183 When a PIN instruction is executed, Wpa is re reset and the interrogation is complete.

$$rWpa = Pin\,T0 + St$$

3.184 GLOSSARY OF LOGIC TERMS

Buc	A control signal derived from the EOM instruction used to activate the TMCC and peripheral devices.
C0 - C23	The 24 signals received from the C register in the CPU.
$\overline{C1x}$	A signal from the C1 flip-flop in the C register in the CPU. $\overline{C1x}$ is utilized to distinguish between TMCC W or Y and TMCC C or D. $\overline{C1x}$ becomes C1x for TMCC C or D.
C21r - C23r	Signals from the C register in the CPU used when serial transfers occur from the C register to the W register.
$\overline{Cd0}$ - $\overline{Cd23}$	Input data lines that are read by the C register in the CPU during a PIN instruction.
/$\overline{Ci0}$/ - /$\overline{Ci23}$/	The 24 signals derived from the C register in the CPU and transmitted on the interconnecting cable
Cpr	A signal from the CPU indicating the parity of C21r - C23r from the C register as information is serially transmitted to the TMCC.
Ecw	The clocking signal from external devices used in clocking of information into or out of the TMCC.
En + $\overline{En}$	A signal from the CPU denoting that interrupt system is enabled.
Eom	A signal from the CPU occurring during an EOM instruction.
Er	A signal which inhibits Eom and Ioc to external devices when an Interlace Prepare flip-flop has been set.
Ew	A flip-flop which when set prepares the interlace to be loaded.
I1w	An interrupt signal indicating in the compatible mode that a WIM or MIW instruction should either empty or load the TMCC and in the extended mode indicating that the interlace word count is zero.
I2w	An interrupt signal indicating in the compatible mode that the input or output process has been terminated and the external device has been disconnected and in the extended mode indicating that an End-of-Record condition has been detected.
Ioc	An input/output control signal derived from Eom.
/$\overline{Ir0}$/ - /$\overline{Ir14}$/	Interlace address signals transmitted to the CPU.
Iw	A flip-flop which when set denotes that the interlace system is active.
Iwa	A signal which counts the interlace word and address counters when a memory access is performed.
Iwc	A signal occurring during the interlace loading sequence which clears the interlace registers.
Iwe	A signal occurring during the EOM instruction of an interlace loading sequence which sets the high order bits of the interlace counters and set several flip-flops used in the extended mode.
Iwf	A signal denoting that the Interlace Word Count Register has reached zero word count.
Iwg	A flip-flop which when set denotes extended mode operation.
Iwh, Iwi	Two flip-flops comprising the Channel Command Register used in the extended mode to control terminal functions of the TMCC.
Iwj	The Channel Command Interrupt Enable flip-flop used in the extended mode to permit selective arming of the I2w interrupt signal.
Iwk	The Channel Command Interrupt Enable flip-flop used in the extended mode to permit selective arming of the I1w interrupt signal.
Iwp	A signal occurring during the POT instruction of an interlace loading sequence which sets initial word count and memory address information into the Interlace Word and Address Counters.

/Kcc0/-/Kcc2/ Switch controlled signals from the Control Console used to select a particular TMCC or DACC for Unit Address and Error display on the Control Console.

/$\overline{\text{Kcc1x}}$/ A switch controlled signal used to distinguish between TMCC W or Y and TMCC C or D. /Kcc1/ becomes /$\overline{\text{Kcc1x}}$/ for TMCC C or D.

Kccw A signal decoded from /Kcc0/-/Kcc2/ such that when true enables displaying the TMCC-W Unit Address and Error status.

Mit A signal derived from memory indicating the DACC is in process of accessing the memory.

Mtgw The magnetic tape gap signal generated by the magnetic tape system.

Npw A signal from external devices used to inhibit parity checking by the TMCC. When Npw is low, parity checking is inhibited.

05, Pwy A signal from the CPU Operation Code Register, of the SDS 925 and 930. "05" is always true from the 9300.

Pin A signal from the CPU derived from a PIN instruction.

Pot A signal from the CPU derived from a POT instruction.

Qr1-Qr4 The four flip-flops in the TMCC comprising the pulse counter.

(Qq1) Timing signal sent to external devices which is true from T5 through T0.

(Qq2) Timing signal sent to external devices which is true from T6 through T3.

(Qq3) Timing signal sent to external devices which is true from T7 through T4.

Qw2 Timing signal which varies when a TMCC character length is expanded.

/$\overline{\text{R9}}$/ A signal transmitted from the TMCC to the CPU defining whether the TMCC memory access operation is a load or store.

/Ra0/-/Ra3/ Signals from the TMCC to the CPU denoting which particular TMCC's are active. These signals are displayed on the SDS 9300 Control Console and not used on the SDS 930.

/$\overline{\text{Rd9}}$/-/$\overline{\text{Rd14}}$/ Signals from the TMCC to the CPU denoting Unit Address Register contents for the particular TMCC selected for displays. These signals are displayed on the Control Console.

/$\overline{\text{Rde}}$/ A signal from the TMCC to the CPU denoting the status of the Error Detector for the particular TMCC selected for display. This signal is displayed on the Control Console.

/Re0/-/Re3/ Signals from the TMCC to the CPU denoting the Error Detector status for each particular TMCC. These signals are displayed on the SDS 9300 Control Console and not used on the SDS 930.

/$\overline{\text{Rr1}}$/-/$\overline{\text{Rr3}}$/ Serial data signals transmitted from the TMCC to the CPU during time share operations.

($\overline{\text{Rt}}$) A ready signal from the TMCC on external devices used to release PIN or POT instructions from Ø2.

Rti A signal from the CPU to external devices indicating that a PIN instruction has terminated.

Rw1-Rw24 Twenty four flip-flops comprising the character buffer. Rw1 through Rw6 are basic. Rw7 through Rw12 are optionally added to expand the character buffer to 12 bits. Rw7 through Rw24 are optionally added to expand the character buffer to 24 bits. TMCC Y, C, D are the only buffers which may be expanded.

Rwp The parity flip-flop in the TMCC. An "odd" parity system is used.

Rwx A flip-flop in each TMCC which is set if a Time Share Request for the particular TMCC can occur.

/$\overline{\text{Rwy1}}$/-/$\overline{\text{Rwy3}}$/ Serial data signals transmitted from the TMCC to the CPU during WIM instructions.

Rx	A signal from the CPU denoting that a WIM or MIW instruction is occurring.
Sio	A response signal from peripheral devices interrogated by an SKS instructions.
Skss	A signal generated in the CPU during SKS instructions and sent to external equipment to be used as a strobe.
/$\overline{\text{Skz}}$/	A signal generated by TMCC's or DACC's which is sent to the CPU for interrogation during SKS instructions.
Ssc	A response signal from external systems equipment interrogated by SKS instructions.
St	A signal from the CPU derived from the manual start button.
Sys	A control signal for systems communication derived from EOM.
T8, T7-T0, T6 + T5, T6-T0, T4-T0, T3-T0, T0	Timing pulses used in the TMCC decoded from the Pulse Counter, Qr1 through Qr4.
Tpc	A timing pulse from the CPU used to synchronize the Pulse Counter, Qr1 through Qr4 in the TMCC with the Pulse Counter, Q1 through Q6, in the CPU.
Trq	A signal transmitted from the TMCC to the CPU indicating that a TMCC requests a Time Share operation.
Trqx	A signal transmitted from TMCC C and D indicating to TMCC W and Y that TMCC C and D are requesting a Time Share operation.
Trqw	A signal generated by TMCC-W indicating that TMCC-W is requesting a Time Share operation.
Tsm	A signal from the CPU indicating that the interlace address counter information has been received by the CPU.
Tsr	A signal from the CPU indicating that a Time Share operation is in process.
W4	A flip-flop in the TMCC which controls the precessing of data between the Character Buffer and the W register.
W5	A flip-flop which detects that a precess should occur.
W6	A flip-flop which detects that an external clock is present.
W7, W8	Two flip-flops comprising the Character Counter.
W9	A flip-flop which is part of the Unit Address Register defining whether a process is input or output.
W10-W14	The Unit Address Register which designates to the TMCC and peripheral devices which device is activated.
Wa0-Wa14	Fifteen flip-flops comprising the Interlace Address Register.
Wb1-Wb3	Inputs to the W register from the Character Register which will vary depending on whether the TMCC is expanded.
Wc	The signal which resets the TMCC and prepares it for a new operation.
Wc0-Wc14	Fifteen flip-flops comprising the Interlace Word Counter.
We	The Error Detector flip-flop.
Wes	An error signal from peripheral devices.
Wev	A signal which when true indicates that the Character Counter is set to the same character count as it was when initially set up by the EOM.
Wf	A flip-flop which when reset denotes on input that the W register is full and on output that the W register is empty.
Wg	A flip-flop used to detect End-of-Record conditions.
Wh	The Halt Detector flip-flop.

Whs	A halt signal from peripheral devices.
Wn1-Wn3	The "now" flip-flops of the W register.
W0	The Halt Interlock flip-flop used on output to enable the Halt Detector after output has been terminated and used on input to denote that the input process has proceeded to process characters.
Wpa	The PIN Address Counter flip-flop which when set allows a PIN instruction to interrogate the Interlace Address Counter.
Wr1-Wr3	The "read" flip-flops of the W register.
Ws	The signal derived from an EOM instruction which initially sets up the TMCC.
Wsc	The Signal Complete flip-flop.
Ww1-Ww3	The signals which permit "writing" into the W register.
Wxx	A signal which denotes that an MIW, WIM or Time Share operation is occurring.
Zw1-Zw24	The twenty four inputs to the Character Register from peripheral devices.
Zwp	The input to the Parity flip-flop from peripheral devices.

3.185 LOGIC EQUATIONS

3.186 Pulse Counter

$sQr1 = Tpc + \overline{Qr2}\ Qr3\ \overline{Qr4}$

$rQr1 = Qr2$

$sQr2 = Qr1\ \overline{Qr2}\ Qr4$

$(Qr4+T0) + Qr1\ Qr3$

$rQr2 = \overline{Qr1}$

$sQr3 = Qr1\ Qr4$

$rQr3 = Qr3\ \overline{Qr4}\ (Qr4+T0)$

$sQr4 = Qr1\ \overline{Qr3}$

$rQr4 = \overline{Qr1}\ \overline{Qr2}$

	Qr1	Qr2	Qr3	Qr4
Tp	0	0	0	0
T8	1	0	0	0
T7	1	0	0	1
T6	1	1	1	1
T5	0	1	1	1
T4	0	0	1	1
T3	0	0	1	0
T2	1	0	1	0
T1	1	1	1	0
T0	0	1	1	0
Tr	0	0	0	0
Tp	0	0	0	0

$T8 = Qr1\ \overline{Qr3}\ \overline{Qr4}$

$T6 + T5 = Qr2\ Qr4$

$T7 - T4 = Qr4$

$T7 - T0 = Qr3 + Qr4$

$T6 - T0 = Qr3$

$T6 - T3 = (Qr4 + \overline{Qr1}\ \overline{Qr2})\ Qr3$

$T3 - T0 = Qr3\ \overline{Qr4}$

$T0 = \overline{Qr1}\ Qr2\ \overline{Qr4}$

$T5 - T1 = Qr3\ \overline{Qr1\ Qr4}\ \overline{T0}$

$T5 - T0 = Qr3\ \overline{Qr1\ Qr4}$

3.187 Buc, Ioc, Sys, etc.

$Buc = Eom\ \overline{C10}\ \overline{C11}\ \overline{C1}*$

$Ioc1 = Eom\ \overline{C10}\ C11$

$Ioc = Ioc1\ \overline{C1}\ \overline{Er}\ Qr3*$

$Sys = Eom\ C10\ C11\ \overline{C9}$

*$\overline{C1}$ becomes C1 for TMCC-C and TMCC-D

3.188 CPU Signals Received

C0 = $\overline{/\overline{Ci0}/}$

C1 =

C2 =

C3 =

C4 =

C5 =

C6 =

C7 =

C8 =

C9 =

C10 =

C11 =

C12 =

C13 =

C14 =

C15 =

C16 =

C17 = $\overline{/\overline{Ci17}/}$

C18 = /$\overline{Ci18}$/
C19 =
C20 =
C21 =
C22 =
C23 = /$\overline{Ci23}$/

$\overline{Tpc}$ = /$\overline{Tpc}$/
Eom = /$\overline{Eom}$/
Pot 1 = /$\overline{Pot}$/
Pin = /$\overline{Pin}$/
$\overline{Rti}$ = /$\overline{Rti}$/
Cpr = /$\overline{Cpr}$/
C21r = /$\overline{C21r}$/
C22r = /$\overline{C22r}$/
C23r = /$\overline{C23r}$/
Rx = /$\overline{Rx}$/
$\overline{Tsm}$ = /$\overline{Tsm}$/
Tsr = /$\overline{Tsr}$/
C1x = /$\overline{C1x}$/ *For TMCC-C and TMCC-D: $\overline{C1x}$ = /$\overline{C1x}$/
Pwy = /$\overline{Pwy}$/ (Pwy = 05 for 92200 and 92210)
$\overline{Mit}$ = /$\overline{Mit}$/
En + (En) = /$\overline{En + (En)}$ /
St = /$\overline{St}$/
Skss = /$\overline{Skss}$/
Kccw = /Kcc0/ + /Kcc1/ + /Kcc2/*
$\overline{Kcc2}$ = /$\overline{Kcc2}$/
Kccy = /$\overline{Kcc0/ + /Kcc1/ + /Kcc2}$/*

*For TMCC-C and TMCC-D, /Kcc1/ becomes /$\overline{Kcc1}$/

3.189 Input/Output Signals Generated

(C0) = C0
(C1) = C1
(C2) = C2
(C3) = C3
(C4) = C4
(C5) = C5
(C6) = C6
(C7) = C7
(C8) = C8
(C9) = C9
(C10) = C10
(C11) = C11
(C12) = C12
(C13) = C13
(C14) = C14
(C15) = C15
(C16) = C16
(C17) = C17
(C18) = C18
(C19) = C19
(C20) = C20
(C21) = C21
(C22) = C22
(C23) = C23
(C17) = C17
(C24) = Cpr (93200 and 92331 only)
(Qq1) = Qr3 ($\overline{Qr1\ Qr4}$) = T5 - T0
(Qq2) = (T7 - T3) Qr3 = T6 - T3
(Qq3) = Qr4 = T7 - T4 Replaces Mtgw on POT connectors at 23F & 24F
(Buc) = Buc
(Ioc) = Ioc
(Eom) = $\overline{Eom\ Er}$
(Sys) = Sys (T5 - T1) $\overline{Tsr}$ Pwy (delete Pwy for 92200 and 92210)
(St) = St
(Pin) = Pin
(Pot 1) = Pot 1
(Pot 2) = Pot 1 (T5 - T1) $\overline{Tsr}$ Pwy (delete Pwy for 92200 and 92210)
($\overline{Rti}$) = $\overline{Rti}$
(Skss) = Skss

3.190 CPU Signals Generated

/$\overline{Rd9}$/ = $\overline{W9\ Kccw}$ $\overline{Y9\ Kccy}$ . . .

/$\overline{Rd10}$/ = $\overline{W10\ Kccw}$ $\overline{Y10\ Kccy}$ . . .

/Rd11/ = W11 Kccw Y11 Kccy . . .

/Rd12/ = W12 Kccw Y12 Kccy . . .

/Rd13/ = W13 Kccw Y13 Kccy . . .

/Rd14/ = W14 Kccw Y14 Kccy . . .

/Rde/ = We Kccw Ye Kccy . . .

/Ra0/ = W10 W11 W12 W13 W14

/Ra2/ for TMCC-C

/Ra1/ = Y10 Y11 Y12 Y13 Y14

/Ra3/ for TMCC-D

/Re0/ = We /Re2/ for TMCC-C

/Re1/ = Ye /Re3/ for TMCC-D

/Wf (W0+W9)/ = Wf (W0 + W9)

/Yf (Y0+Y9)/ = Yf (Y0 + Y9)

/Trq/ = Trqw Trqy Trqx

/I1w/ = I1w /I1c/ for TMCC-C

/I2w/ = I2w /I2c/ for TMCC-C

/I1y/ = I1y /I1d/ for TMCC-D

/I2y/ = I2y /I2d/ for TMCC-D

/Skrz/ = Skr C10 C11 Ssc C1 C9

C10 C11 Sio . . .*

*C1 becomes C1 for TMCC-C and TMCC-D

/Rr1/ = Wr1 Rwx Yr1 Ryx . . .

/Rr2/ = Wr2 Rwx Yr2 Ryx . . .

/Rr3/ = Wr3 Rwx Yr3 Ryx . . .

/Rwy1/ = Wr1 Pwy Yr1 Pwy

(Pwy = 05 for 92200 and 92210)

/Rwy2/ = Wr2 Pwy Yr2 Pwy

(Pwy = 05 for 92200 and 92210)

/Rwy3/ = Wr3 Pwy Yr3 Pwy

(Pwy = 05 for 92200 and 92210)

(Cd0) = (Cd0) . . .

(Cd1) = (Cd1) . . .

(Cd2) = (Cd2) . . .

(Cd3) = (Cd3) . . .

(Cd4) = (Cd4) . . .

(Cd5) = (Cd5) . . .

(Cd6) = (Cd6) . . .

(Cd7) = (Cd7) . . .

(Cd8) = (Cd8) . . .

(Cd9) = (Cd9) Wa0 Wpa Ya0 Ypa . . .

(Cd10) = (Cd10) Wa1 Wpa Ya1 Ypa . . .

(Cd11) = (Cd11) Wa2 Wpa Ya2 Ypa . . .

(Cd12) = (Cd12) Wa3 Wpa Ya3 Ypa . . .

(Cd13) = (Cd13) Wa4 Wpa Ya4 Ypa . . .

(Cd14) = (Cd14) Wa5 Wpa Ya5 Ypa . . .

(Cd15) = (Cd15) Wa6 Wpa Ya6 Ypa . . .

(Cd16) = (Cd16) Wa7 Wpa Ya7 Ypa . . .

(Cd17) = (Cd17) Wa8 Wpa Ya8 Ypa . . .

(Cd18) = (Cd18) Wa9 Wpa Ya9 Ypa . . .

(Cd19) = (Cd19) Wa10 Wpa Ya10 Ypa . . .

(Cd20) = (Cd20) Wa11 Wpa Ya11 Ypa . . .

(Cd21) = (Cd21) Wa12 Wpa Ya12 Ypa . . .

(Cd22) = (Cd22) Wa13 Wpa Ya13 Ypa . . .

(Cd23) = (Cd23) Wa14 Wpa Ya14 Ypa . . .

(Rt) = (Rt) Wap + Ew Yap + Ey . . .

(Cd24) = (Cd24) (93200 and 93221 only)

(Bt) = (Bt) (93200 and 93221 only)

/Ir0/ = Wa0 Rwx Ya0 Ryx . . .

/Ir1/ = Wa1 Rwx Ya1 Ryx . . .

/Ir2/ = Wa2 Rwx Ya2 Ryx . . .

/Ir3/ = Wa3 Rwx Ya3 Ryx . . .

/Ir4/ = Wa4 Rwx Ya4 Ryx . . .

/Ir5/ = Wa5 Rwx Ya5 Ryx . . .

/Ir6/ = Wa6 Rwx Ya6 Ryx . . .

/Ir7/ = Wa7 Rwx Ya7 Ryx . . .

/Ir8/ = Wa8 Rwx Ya8 Ryx . . .

/Ir9/ = Wa9 Rwx Ya9 Ryx . . .

/Ir10/ = Wa10 Rwx Ya10 Ryx . . .

/Ir11/ = Wa11 Rwx Ya11 Ryx . . .

/Ir12/ = Wa12 Rwx Ya12 Ryx. . .

/Ir13/ = Wa13 Rwx Ya13 Ryx . . .

/Ir14/ = Wa14 Rwx Ya14 Ryx . . .

/R9/ = W9 Rwx Y9 Ryx . . .

3.191 TMCC Signals Received

Er = /$\overline{Er}$/

Trqx = /$\overline{Trqx}$/

3.192 Input/Output Signals Received

Sio = $\overline{(Sio)}$

Ssc = $\overline{(Ssc)}$

3.193 TMCC Signals Generated

/$\overline{Er}$/ = $\overline{Ew}\ \overline{Ey}$ . . .

/$\overline{Trqx}$/ = $\overline{\overline{Trq(c)}\ \overline{Trq(d)}}$

3.194 LOGIC EQUATIONS FOR W BUFFER

3.195 Unit Address Register

sW14 = Ws C23

rW14 = Wc

sW13 = Ws C22

rW13 = Wc

sW12 = Ws C21

rW12 = Wc

sW11 = Ws C20

rW11 = Wc

sW10 = Ws C19 + (Ioc C12 $\overline{C17}$ $\overline{C19}$ $\overline{C20}$ $\overline{C21}$ $\overline{C22}$ $\overline{C23}$) $\overline{W9}$ $\overline{W10}$

rW10 = Wc

3.196 Input/Output

sW9 = Ws C18

rW9 = Wc

3.197 Clear and Set Signals

Wc = Buc $\overline{C17}$ (T6 + T5) + Wh $\overline{Wf}$ (T3 - T0) + St

Ws = Buc $\overline{C17}$ (T3 - T0)

3.198 Clock Counter

sW6 = $\overline{W5}$ Ecw T8 $\overline{\overline{W10}\ \overline{W11}\ \overline{W12}\ \overline{W13}\ \overline{W14}}$

rW6 = W5 T0 + Wc

sW5 = $\overline{W5}$ W6 $\overline{Ecw}$ T0 + Ws C13 C18 T0 $\overline{\overline{W10}\ \overline{W11}\ \overline{W12}\ \overline{W13}\ \overline{W14}}$

rW5 = W4 T0 + Wc

sW4 = W5 Wf T8 $\overline{Wg}$
+ Ws T0
+ Wh Wf T8
+ Iwg $\overline{W9}$ $\overline{Iwi}$ W5 Iwf T8
+ Iwg Wg Wf W0 $\overline{Wev}$ Iw T8 $\overline{\overline{W7}\ \overline{W9}\ W10\ W11\ \overline{Wh}}$

rW4 = W4 T0 + W4 T8

3.199 Character Counter

sW8 = Ws C16
+ W7 $\overline{W8}$ W4 T0
+ Wxx Wn2 $\overline{(T7 - T0)}$ $\overline{W4}$
+ $\overline{W7}$ $\overline{W9}$ W10 W11 $\overline{Wh}$

rW8 = W8 W4 T0 + Wc

sW7 = Ws C15
+ Wxx Wn1 $\overline{(T7 - T0)}$ $\overline{W4}$

rW7 = Wc
+ W7 $\overline{W8}$ W4 T0

3.200 Character Counter Even

Wev = W8 Wn2 W7 Wn1 + $\overline{W8}$ $\overline{Wn2}$ W7 Wn1
+ $\overline{W8}$ $\overline{Wn2}$ $\overline{W7}$ $\overline{Wn1}$ + W8 Wn2 $\overline{W7}$ $\overline{Wn1}$

3.201 Halt Interlock

sW0 = $\overline{W9}$ W6 $\overline{W8}$ Ecw
+ Ws C18 W9

rW0 = Wc
+ (Ioc C12 $\overline{C17}$ $\overline{C19}$ $\overline{C20}$ $\overline{C21}$ $\overline{C22}$ $\overline{C23}$) W9 T0
+ W9 Iw Iwf ($\overline{Iwg}$ + $\overline{Iwh}$ + $\overline{Iwi}$) $\overline{T7 - T0}$

3.202 Computer Interlock

sWf = Wc $\overline{Wh}$
+ Iwa $\overline{Mit}$ T0
+ Rx T0 Pwy *(Pwy = 05 for 92200)

*Rx is always false for TMCC-C

rWf = $\overline{W7}\ \overline{W8}$ W4 (T6 + T5)
+ Ws C18
+ $\overline{W9}$ W10 W11 W0 Mtgw $\overline{W7}$ (T6 + T5) $\overline{Wh}$

3.203 End-of-Record Detector

sWg = Mtgw T0 Iwg W11 (W0 $\overline{W9}$ + $\overline{W0}$ W5 $\overline{W6}$ W9)
+ Whs $\overline{T7 - T0}$ $\overline{W10}$ $\overline{W11}$ $\overline{W12}$ $\overline{W13}$ $\overline{W14}$
+ $\overline{W9}$ $\overline{W10}$ $\overline{W11}$ W12 $\overline{W13}$ ($\overline{Rw1}$ $\overline{Rw2}$ $\overline{Rw3}$ $\overline{Rw4}$ $\overline{Rw5}$ $\overline{Rw6}$ $\overline{Rwp}$) W5 $\overline{T7 - T0}$ $\overline{W10}$ $\overline{W11}$ $\overline{W12}$ $\overline{W13}$ $\overline{W14}$
rWg = Wc
+ Wg $\overline{Iwg}$ W11 T0

3.204 Halt Detector

sWh = Wg $\overline{Iwg}$ T8
+ Whs W11 T8
+ Wg $\overline{W9}$ $\overline{W11}$ $\overline{Iwh}$ (Iwf + Wev Wf) T8 Iwg
+ W9 $\overline{W11}$ $\overline{W0}$ W5 $\overline{W6}$ ($\overline{Iwg}$ + Iwi $\overline{Iwh}$) T8
+ $\overline{W9}$ $\overline{W11}$ Iwg $\overline{Iwh}$ Iwi Iwf T8 W0
+ W9 $\overline{Iwh}$ T8 Whs
rWh = Wc (T6 + T5)
+ Wh $\overline{Wf}$ T8

3.205 Signal Complete

sWsc = Wg Iwg Iwh (Wev Wf + Iwf) T8
+ Wh $\overline{Wf}$ T8 + St
+ Ws $\overline{C19}$ $\overline{C20}$ $\overline{C21}$ $\overline{C22}$ $\overline{C23}$
rWsc = Wsc T8 $\overline{Iwg}$

3.206 Interrupt Signals

I1w = $\overline{Wf}$ W0 $\overline{Wh}$ (En + $\overline{En}$) $\overline{Iw}$ $\overline{Ew}$ $\overline{Iwg}$
+ Iwg $\overline{Iw}$ Iwf Iwk
I2w = (En + $\overline{En}$) $\overline{Iwg}$ Wh $\overline{Wf}$
+ Wsc Iwj Iwg

3.207 WIM + MIW Interlock =

$\overline{Wf}$ (W0 + $\overline{W9}$)

3.208 Load Buffer from C

Wxx = Rx Pwy + Rwx Tsr Iw*
(Pwy = 05 and Iw deleted from 92200)

*Rx is always false for TMCC-C

3.209 Time Share Request

Trqw = $\overline{Wf}$ W0 $\overline{Wh}$ Iw $\overline{Iwf}$

3.210 Time Share Select

sRwx = $\overline{Tsm}$ Trqw $\overline{Trqy}$ $\overline{Trqx}$ ($\overline{T7 - T0}$)
rRwx = $\overline{Tsm}$ T0

3.211 Time Share Priority

Trqx = Priority signal from TMCC-C and TMCC-D
Trqx = Trq(c) + Trq(d)
Trq = Trqx + Trqw + Trqy

3.212 W Register

Ww1 = W4 W7 ($\overline{T7 - T0}$)
+ $\overline{W4}$ Wn1 ($\overline{T7 - T0}$)
+ $\overline{W4}$ Wn1 $\overline{Wxx}$
+ W4 Wb1 (T7 - T0) *
+ $\overline{W4}$ C21r (T7 - T0) Wxx

Ww2 = W4 W8 ($\overline{T7 - T0}$)
+ $\overline{W4}$ Wn2 ($\overline{T7 - T0}$)
+ $\overline{W4}$ Wn2 $\overline{Wxx}$
+ W4 Wb2 (T7 - T0)*
+ $\overline{W4}$ C22r (T7 - T0) Wxx

sWr1, 2, 3 = Ww1, 2, 3 Delayed by 9 pulse times

sWn1, 2, 3 = Wr1, 2, 3 respectively

* { Wb1 = $\overline{Wx12}$ $\overline{Wx24}$ Rw4 + Wx12 Rw10 + Wx24 Rw22
Wb2 = $\overline{Wx12}$ $\overline{Wx24}$ Rw5 + Wx12 Rw11 + Wx24 Rw23 } for 93200 and 93221

$$Ww3 = \overline{W4}\ Wn3\ \overline{Wxx} + W4\ Wb3\ * + \overline{W4}\ C23r\ Wxx$$

* $Wb3 = \overline{Wx12}\ \overline{Wx24}\ Rw6 + Wx12\ Rw12 + Wx24\ Rw24$ for 93200 and 93221

Wb1, 2, 3 equals Rw4, 5, 6 respectively for 92200

Wb1, 2, 3 equals Rw10, 11, 12 respectively for 92201

Wb1, 2, 3 equals Rw22, 23, 24 respectively for 92202

3.213 Character Buffer*

$$sRw1 = W4\ \overline{Wxx}\ (T7 - T0)\ Wn1 + \overline{W9}\ W6\ \overline{W5}\ Zw1 + W4\ Wxx\ C21r$$

$$rRw1 = W4\ \overline{Wxx}\ \overline{Wn1} + \overline{W9}\ \overline{W6}\ \overline{W5}\ \overline{W4} + W4\ Wxx\ \overline{C21r}$$

$$sRw2 = W4\ \overline{Wxx}\ (T7 - T0)\ Wn2 + \overline{W9}\ W6\ \overline{W5}\ Zw2 + W4\ Wxx\ C22r$$

$$rRw2 = W4\ \overline{Wxx}\ \overline{Wn2} + \overline{W9}\ \overline{W6}\ \overline{W5}\ \overline{W4} + W4\ Wxx\ \overline{C22r}$$

$$sRw3 = W4\ \overline{Wxx}\ (T7 - T0)\ Wn3 + \overline{W9}\ W6\ \overline{W5}\ Zw3 + W4\ Wxx\ C23r$$

$$rRw3 = W4\ \overline{Wxx}\ \overline{Wn3} + \overline{W9}\ \overline{W6}\ \overline{W5}\ \overline{W4} + W4\ Wxx\ \overline{C23r}$$

$$sRw4 = W4\ \overline{Rw4}\ Rw1 + \overline{W9}\ W6\ \overline{W5}\ Zw4$$
$$rRw4 = W4\ Rw4\ \overline{Rw1} + \overline{W9}\ \overline{W6}\ \overline{W5}\ \overline{W4}$$

$$sRw5 = W4\ \overline{Rw5}\ Rw2 + \overline{W9}\ W6\ \overline{W5}\ Zw5$$
$$rRw5 = W4\ Rw5\ \overline{Rw2} + \overline{W9}\ \overline{W6}\ \overline{W5}\ \overline{W4}$$

$$sRw6 = W4\ \overline{Rw6}\ Rw3 + \overline{W9}\ W6\ \overline{W5}\ Zw6$$
$$rRw6 = W4\ Rw6\ \overline{Rw3} + \overline{W9}\ \overline{W6}\ \overline{W5}\ \overline{W4}$$

*For 12-bit extension, add Rw7 through Rw12

For 24-bit extension, add Rw7 through Rw24

Character Size

12 bit character = Wx12 (93200 and 93221 only)

24 bit character = Wx24 (93200 and 93221 only)

3.214 Character Buffer Extended to 12 Bits

$$sRw7 = W4\ \overline{Rw7}\ Rw4 + \overline{W9}\ W6\ \overline{W5}\ Zw7$$
$$rRw7 = W4\ Rw7\ \overline{Rw4} + \overline{W9}\ \overline{W6}\ \overline{W5}\ \overline{W4}$$

$$sRw8 = W4\ \overline{Rw8}\ Rw5 + \overline{W9}\ W6\ \overline{W5}\ Zw8$$
$$rRw8 = W4\ Rw8\ \overline{Rw5} + \overline{W9}\ \overline{W6}\ \overline{W5}\ \overline{W4}$$

$$sRw9 = W4\ \overline{Rw9}\ Rw6 + \overline{W9}\ W6\ \overline{W5}\ Zw9$$
$$rRw9 = W4\ Rw9\ \overline{Rw6} + \overline{W9}\ \overline{W6}\ \overline{W5}\ \overline{W4}$$

$$sRw10 = W4\ \overline{Rw10}\ Rw7 + \overline{W9}\ W6\ \overline{W5}\ Zw10$$
$$rRw10 = W4\ Rw10\ \overline{Rw7} + \overline{W9}\ \overline{W6}\ \overline{W5}\ \overline{W4}$$

$$sRw11 = W4\ \overline{Rw11}\ Rw8 + \overline{W9}\ W6\ \overline{W5}\ Zw11$$
$$rRw11 = W4\ Rw11\ \overline{Rw8} + \overline{W9}\ \overline{W6}\ \overline{W5}\ \overline{W4}$$

$$sRw12 = W4\ \overline{Rw12}\ Rw9 + \overline{W9}\ W6\ \overline{W5}\ Zw12$$
$$rRw12 = W4\ Rw12\ \overline{Rw9} + \overline{W9}\ \overline{W6}\ \overline{W5}\ \overline{W4}$$

3.215 Character Buffer Extended to 24 Bits

$$sRw13 = W4\ \overline{Rw13}\ Rw10 + \overline{W9}\ W6\ \overline{W5}\ Zw13$$
$$rRw13 = W4\ Rw13\ \overline{Rw10} + \overline{W9}\ \overline{W6}\ \overline{W5}\ \overline{W4}$$
$$sRw14 = W4\ \overline{Rw14}\ Rw11 + \overline{W9}\ W6\ \overline{W5}\ Zw14$$
$$rRw14 = W4\ Rw14\ \overline{Rw11} + \overline{W9}\ \overline{W6}\ \overline{W5}\ \overline{W4}$$
$$sRw15 = W4\ \overline{Rw15}\ Rw12 + \overline{W9}\ W6\ \overline{W5}\ Zw15$$
$$rRw15 = W4\ Rw15\ \overline{Rw12} + \overline{W9}\ \overline{W6}\ \overline{W5}\ \overline{W4}$$
$$sRw16 = W4\ \overline{Rw16}\ Rw13 + \overline{W9}\ W6\ \overline{W5}\ Zw16$$
$$rRw16 = W4\ Rw16\ \overline{Rw13} + \overline{W9}\ \overline{W6}\ \overline{W5}\ \overline{W4}$$

$$sRw17 = W4\ \overline{Rw17}\ Rw14 + \overline{W9}\ W6\ \overline{W5}\ Zw17$$
$$rRw17 = W4\ Rw17\ \overline{Rw14} + \overline{W9}\ \overline{W6}\ \overline{W5}\ \overline{W4}$$

$$sRw18 = W4\ \overline{Rw18}\ Rw15 + \overline{W9}\ W6\ \overline{W5}\ Zw18$$
$$rRw18 = W4\ Rw18\ \overline{Rw15} + \overline{W9}\ \overline{W6}\ \overline{W5}\ \overline{W4}$$

$$sRw19 = W4\ \overline{Rw19}\ Rw16 + \overline{W9}\ W6\ \overline{W5}\ Zw19$$
$$rRw19 = W4\ Rw19\ \overline{Rw16} + \overline{W9}\ \overline{W6}\ \overline{W5}\ \overline{W4}$$

$$sRw20 = W4\ \overline{Rw20}\ Rw17 + \overline{W9}\ W6\ \overline{W5}\ Zw20$$
$$rRw20 = W4\ Rw20\ \overline{Rw17} + \overline{W9}\ \overline{W6}\ \overline{W5}\ \overline{W4}$$

$$sRw21 = W4\ \overline{Rw21}\ Rw18 + \overline{W9}\ W6\ \overline{W5}\ Zw21$$
$$rRw21 = W4\ Rw21\ \overline{Rw18} + \overline{W9}\ \overline{W6}\ \overline{W5}\ \overline{W4}$$

$$sRw22 = W4\ \overline{Rw22}\ Rw19 + \overline{W9}\ W6\ \overline{W5}\ Zw22$$
$$rRw22 = W4\ Rw22\ \overline{Rw19} + \overline{W9}\ \overline{W6}\ \overline{W5}\ \overline{W4}$$

sRw23 = W4 $\overline{Rw23}$ Rw20 + $\overline{W9}$ W6 $\overline{W5}$ Zw23

rRw23 = W4 Rw23 $\overline{Rw20}$ + $\overline{W9}$ $\overline{W6}$ $\overline{W5}$ $\overline{W4}$

sRw24 = W4 $\overline{Rw24}$ Rw21 + $\overline{W9}$ W6 $\overline{W5}$ Zw24

rRw24 = W4 Rw24 $\overline{Rw21}$ + $\overline{W9}$ $\overline{W6}$ $\overline{W5}$ $\overline{W4}$

3.216 Parity Flip-Flop

sRwp = $\overline{W9}$ W4 $\overline{Rwp}$ (Wb1 ⊕ Wb2 ⊕ Wb3) (T7 - T0) Qw1 *
+ W9 W4 $\overline{Rwp}$ $\overline{Wxx}$ (Wn1⊕Wn2⊕Wn3) Qw2 (T7 - T0) *
+ W9 W4 $\overline{Rwp}$ Wxx Cpr Qw2 (T7 - T0) *
+ $\overline{W9}$ W6 $\overline{W5}$ Zwp
+ Wf W5 T8 $\overline{Rwp}$

rRwp = $\overline{W9}$ W4 Rwp (Wb1⊕Wb2⊕Wb3) (T7 - T0) Qw1 *
+ W9 W4 Rwp $\overline{Wxx}$ (Wn1⊕Wn2⊕Wn3) Qw2 (T7 - T0) *
+ W9 W4 Rwp Wxx Cpr Qw2 (T7 - T0) *
+ $\overline{W9}$ $\overline{W6}$ $\overline{W5}$ $\overline{W4}$
+ Wf W5 T8 $\overline{W9}$ Rwp
+ Wc

* Qw1 = $\overline{Wx12\ \overline{Qr4} + \overline{Wx12}\ \overline{Wx24}\ \overline{Qr1}\ \overline{Qr4}}$ (for 93200 and 93221)

Qw2 = $\overline{Wx12\ Qr4 + \overline{Wx12}\ \overline{Wx24}\ \overline{Qr2}\ \overline{Qr4}}$ (for 93200 and 93221)

Qw1 = Qr1 Qr4 for 92200

Qw1 = Qr4 for 92201

Qw1 is deleted for 92202

Qw2 = Qr2 $\overline{Qr4}$ for 92200

Qw2 = $\overline{Qr4}$ for 92201

Qw2 is deleted for 92202

3.217 Error Detector

sWe = $\overline{W9}$ $\overline{W6}$ $\overline{W5}$ $\overline{W4}$ Rwp $\overline{Wg}$ Npw ($\overline{Iwg}$ + Iwi + $\overline{Iwf}$)
+ W0 $\overline{W6}$ W5 Ecw T8
+ Wes

rWe = Wc $\overline{Wh}$

3.218 Interlace Prepare

sEw = Iwc $\overline{Ew}$ (T3 - T0)

rEw = Wc T0
+ Pot 1 (T3 - T0) Ew

3.219 Interlace Clear

Iwc = Eom C9 $\overline{C10}$ $\overline{C1}$ $\overline{C17}$ (T3 - T0) *

* $\overline{C1}$ becomes C1 for TMCC-C

3.220 Interlace Load

Iwp = Pot 1 (T6 - T5) Ew

Iwe = Ioc 1 (T6 + T5) Ew

3.221 Interlace Active

sIw = Pot 1 (T3 - T0) Ew $\overline{Iw}$

rIw = Iwf T8 ($\overline{T7 - T0}$)
+ (Wc + Iwc + Ws $\overline{C19}$ $\overline{C20}$ $\overline{C21}$ $\overline{C22}$ $\overline{C23}$) (T3 - T0) Iw

3.222 Zero Count

Iwf = Wc0 Wc1 Wc2 Wc3 Wc4 Wc5 Wc6 Wc7 Wc8 Wc9 Wc10 Wc11 Wc12 Wc13 Wc14 Ew

3.223 Interlace Count Trigger

Iwa = Rwx Tsm

3.224 Interlace Counter Clock Enables

Computer Clock Enable: Ew $\overline{Iw}$

Counter Clock Enable: $\overline{Ew}$

3.225 Extend Operations

slwg = Iwe C12

rlwg = Iwc + Wsc T8 $\overline{W10}$ $\overline{W11}$ $\overline{W12}$ $\overline{W13}$ $\overline{W14}$ Iwg

3.226 Channel Command Interrupt Enables

sIwj = Iwe C13 (Eor)
rIwj = Iwc + I2w T8 Iwj

sIwk = Iwe C14 (Iwf)
rIwk = Iwc + I1w T8 Iwk

3.227 Channel Command Register

sIwh = Iwe C15
rIwh = Iwc

sIwi = Iwe C16
rIwi = Iwc

3.228 Word Counter

sWc14 = Iwc + $\overline{Ew}$ $\overline{Wc14}$ Iwa $\overline{Ew}$
rWc14 = Iwp C9 + $\overline{Ew}$ Wc14 Iwa $\overline{Ew}$

sWc13 = Iwc + $\overline{Ew}$ $\overline{Wc13}$ Wc14 $\overline{Ew}$
rWc13 = Iwp C8 + $\overline{Ew}$ Wc13 Wc14 $\overline{Ew}$

sWc12 = Iwc + $\overline{Ew}$ $\overline{Wc12}$ Wc13 Wc14 $\overline{Ew}$
rWc12 = Iwp C7 + $\overline{Ew}$ $\overline{Wc12}$ Wc13 Wc14 $\overline{Ew}$

sWc11 = Iwc + $\overline{Ew}$ $\overline{Wc11}$ Wc12 Wc13 Wc14 $\overline{Ew}$
rWc11 = Iwp C6 + $\overline{Ew}$ Wc11 Wc12 Wc13 Wc14 $\overline{Ew}$

sWc10 = Iwc + $\overline{Ew}$ $\overline{Wc10}$ Wc11 $\overline{Ew}$
rWc10 = Iwp C5 + $\overline{Ew}$ Wc10 Wc11 $\overline{Ew}$

sWc9 = Iwc + $\overline{Ew}$ $\overline{Wc9}$ Wc10 Wc11 $\overline{Ew}$
rWc9 = Iwp C4 + $\overline{Ew}$ Wc9 Wc10 Wc11 $\overline{Ew}$

sWc8 = Iwc + $\overline{Ew}$ $\overline{Wc8}$ Wc9 Wc10 Wc11 $\overline{Ew}$
rWc8 = Iwp C3 + $\overline{Ew}$ Wc8 Wc9 Wc10 Wc11 $\overline{Ew}$

sWc7 = Iwc + $\overline{Ew}$ $\overline{Wc7}$ Wc8 $\overline{Ew}$
rWc7 = Iwp C2 + $\overline{Ew}$ Wc7 Wc8 $\overline{Ew}$

sWc6 = Iwc + $\overline{Ew}$ $\overline{Wc6}$ Wc7 Wc8 $\overline{Ew}$
rWc6 = Iwp C1 + $\overline{Ew}$ Wc6 Wc7 Wc8 $\overline{Ew}$

sWc5 = Iwc + $\overline{Ew}$ $\overline{Wc5}$ Wc6 Wc7 Wc8 $\overline{Ew}$
rWc5 = Iwp C0 + $\overline{Ew}$ Wc5 Wc6 Wc7 Wc8 $\overline{Ew}$

sWc4 = Iwc + $\overline{Ew}$ $\overline{Wc4}$ Wc5 $\overline{Ew}$
rWc4 = Iwe C23 + $\overline{Ew}$ Wc4 Wc5 $\overline{Ew}$

sWc3 = Iwc + $\overline{Ew}$ $\overline{Wc3}$ Wc4 Wc5 $\overline{Ew}$
rWc3 = Iwe C22 + $\overline{Ew}$ Wc3 Wc4 Wc5 $\overline{Ew}$

sWc2 = Iwc + $\overline{Ew}$ $\overline{Wc2}$ Wc3 Wc4 Wc5 $\overline{Ew}$
rWc2 = Iwe C21 + $\overline{Ew}$ Wc2 Wc3 Wc4 Wc5 $\overline{Ew}$

sWc1 = Iwc + $\overline{Ew}$ $\overline{Wc1}$ Wc2 $\overline{Ew}$
rWc1 = Iwe C20 + $\overline{Ew}$ Wc1 Wc2 $\overline{Ew}$

sWc0 = Iwc + $\overline{Ew}$ $\overline{Wc0}$ Wc1 Wc2 $\overline{Ew}$
rWc0 = Iwe C19

3.229 Address Counter

sWa14 = Iwc + $\overline{Ew}$ $\overline{Wa14}$ Iwa $\overline{Ew}$
rWa14 = Iwp $\overline{C23}$ + $\overline{Ew}$ Wa14 Iwa $\overline{Ew}$

sWa13 = Iwc + $\overline{Ew}$ $\overline{Wa13}$ Wa14 Iwa $\overline{Ew}$
rWa13 = Iwp $\overline{C22}$ + $\overline{Ew}$ Wa13 Wa14 Iwa $\overline{Ew}$

sWa12 = Iwc + $\overline{Ew}$ $\overline{Wa12}$ Wa13 $\overline{Ew}$
rWa12 = Iwp $\overline{C21}$ + $\overline{Ew}$ Wa12 Wa13 $\overline{Ew}$

sWa11 = Iwc + $\overline{Ew}$ $\overline{Wa11}$ Wa12 Wa13 $\overline{Ew}$
rWa11 = Iwp $\overline{C20}$ + $\overline{Ew}$ Wa11 Wa12 Wa13 $\overline{Ew}$

sWa10 = Iwc + $\overline{Ew}$ $\overline{Wa10}$ Wa11 Wa12 Wa13 $\overline{Ew}$
rWa10 = Iwp $\overline{C19}$ + $\overline{Ew}$ Wa10 Wa11 Wa12 Wa13 $\overline{Ew}$

sWa9 = Iwp C18 + $\overline{Ew}$ $\overline{Wa9}$ Wa10 $\overline{Ew}$
rWa9 = Iwc + $\overline{Ew}$ Wa9 Wa10 $\overline{Ew}$

sWa8 = Iwp C17 + $\overline{Ew}$ $\overline{Wa8}$ Wa9 Wa10 $\overline{Ew}$
rWa8 = Iwc + $\overline{Ew}$ Wa8 Wa9 Wa10 $\overline{Ew}$

sWa7 = Iwp C16 + $\overline{Ew}$ $\overline{Wa7}$ Wa8 Wa9 Wa10 $\overline{Ew}$
rWa7 = Iwc + $\overline{Ew}$ Wa7 Wa8 Wa9 Wa10 $\overline{Ew}$

sWa6 = Iwp C15 + $\overline{Ew}$ $\overline{Wa6}$ Wa7 $\overline{Ew}$
rWa6 = Iwc + $\overline{Ew}$ Wa6 Wa7 $\overline{Ew}$

sWa5 = Iwp C14 + $\overline{Ew}$ $\overline{Wa5}$ Wa6 Wa7 $\overline{Ew}$
rWa5 = Iwc + $\overline{Ew}$ Wa5 Wa6 Wa7 $\overline{Ew}$

sWa4 = Iwp C13 + $\overline{Ew}$ $\overline{Wa4}$ Wa5 Wa6 Wa7 $\overline{Ew}$
rWa4 = Iwc + $\overline{Ew}$ Wa4 Wa5 Wa6 Wa7 $\overline{Ew}$

sWa3 = Iwp C12 + $\overline{Ew}$ $\overline{Wa3}$ Wa4 $\overline{Ew}$
rWa3 = Iwc + $\overline{Ew}$ Wa3 Wa4 $\overline{Ew}$

sWa2 = Iwp C11 + $\overline{Ew}$ $\overline{Wa2}$ Wa3 Wa4 $\overline{Ew}$
rWa2 = Iwc + $\overline{Ew}$ Wa2 Wa3 Wa4 $\overline{Ew}$

sWa1 = Iwp C10 + $\overline{Ew}$ $\overline{Wa1}$ Wa2 Wa3 Wa4 $\overline{Ew}$
rWa1 = Iwc + $\overline{Ew}$ Wa1 Wa2 Wa3 Wa4 $\overline{Ew}$

sWa0 = Iwe C18 + $\overline{Ew}$ $\overline{Wa0}$ Wa1 $\overline{Ew}$
rWa0 = Iwc

3.230 PIN Address Counter

sWpa = Ioc $\overline{C17}$ C13 $\overline{C19}$ $\overline{C20}$ $\overline{C21}$ $\overline{C22}$ $\overline{C23}$ T0
rWpa = Pin T0 + St

3.231 Skip Gate:

Skr = $\overline{C1}$ $\overline{C17}$ $\overline{C9}$ $\overline{C10}$ C11 $\overline{C19}$ $\overline{C20}$ $\overline{C21}$ $\overline{C22}$ $\overline{C23}$ C15 Wsc*
+ $\overline{C1}$ $\overline{C17}$ $\overline{C9}$ $\overline{C10}$ C11 $\overline{C19}$ $\overline{C20}$ $\overline{C21}$ $\overline{C22}$ $\overline{C23}$ C12 $\overline{W10}$ $\overline{W11}$ $\overline{W12}$ $\overline{W13}$ $\overline{W14}$*
+ $\overline{C1}$ $\overline{C17}$ $\overline{C9}$ $\overline{C10}$ C11 $\overline{C19}$ $\overline{C20}$ $\overline{C21}$ $\overline{C22}$ $\overline{C23}$ C13 Iwf*
+ $\overline{C1}$ $\overline{C17}$ $\overline{C9}$ $\overline{C10}$ C11 $\overline{C19}$ $\overline{C20}$ $\overline{C21}$ $\overline{C22}$ $\overline{C23}$ C14 $\overline{We}$*
+ C10 $\overline{C11}$ C14 $\overline{W10}$ $\overline{W11}$ $\overline{W12}$ $\overline{W13}$ $\overline{W14}$ $\overline{C1}$*
+ C10 $\overline{C11}$ C20 We $\overline{C1}$*
+ - - -

*$\overline{C1}$ becomes C1 for TMCC-C

3.232 Input/Output Signals Received

Zwp = (Zwp)
Zw1 = (Zw1)
Zw2 = (Zw2)
Zw3 = (Zw3)
Zw4 = (Zw4)
Zw5 = (Zw5)
Zw6 = (Zw6)
Zw7 = (Zw7)
Zw8 = (Zw8)
Zw9 = (Zw9)
Zw10 = (Zw10)
Zw11 = (Zw11)
Zw12 = (Zw12)
Zw13 = (Zw13)
Zw14 = (Zw14)
Zw15 = (Zw15)
Zw16 = (Zw16)
Zw17 = (Zw17)
Zw18 = (Zw18)
Zw19 = (Zw19)
Zw20 = (Zw20)
Zw21 = (Zw21)
Zw22 = (Zw22)
Zw23 = (Zw23)
Whs = (Whs)
Wes = (Wes)
Mtgw = (Mtgw)
Npw = (Npw)
Ecw = (Ecw)
Wx12 = (Wx12) (93200 and 93221 only)
Wx24 = (Wx24) (93200 and 93221 only)

3.233 Input/Output Signals Generated

(Rwp) = Rwp
(Rw1) = Rw1
(Rw2) = Rw2
(Rw3) = Rw3
(Rw4) = Rw4
(Rw5) = Rw5
(Rw6) = Rw6
(Rw7) = Rw7
(Rw8) = Rw8
(Rw9) = Rw9
(Rw10) = Rw10
(Rw11) = Rw11

(Rw12) = Rw12
(Rw13) = Rw13
(Rw14) = Rw14
(Rw15) = Rw15
(Rw16) = Rw16
(Rw17) = Rw17
(Rw18) = Rw18
(Rw19) = Rw19
(Rw20) = Rw20
(Rw21) = Rw21
(Rw22) = Rw22
(Rw23) = Rw23
(Rw24) = Rw24

(W9) = W9
(W10) = W10
(W11) = W11
(W12) = W12
(W13) = W13
(W0) = W0
(W5) = W5
(W6) = W6
(Iw) = Iw

3.234 LOGIC EQUATIONS FOR Y BUFFER

3.235 Unit Address Register

$$sY14 = Ys\ C23$$
$$rY14 = Yc$$

$$sY13 = Ys\ C22$$
$$rY13 = Yc$$

$$sY12 = Ys\ C21$$
$$rY12 = Yc$$

$$sY11 = Ys\ C20$$
$$rY11 = Yc$$

$$sY10 = Ys\ C19 + (Ioc\ C12\ C17\ \overline{C19}\ \overline{C20}\ \overline{C21}\ \overline{C22}\ \overline{C23})\ \overline{Y9}\ \overline{Y10}$$
$$rY10 = Yc$$

3.236 Input/Output

$$sY9 = Ys\ C18$$
$$rY9 = Yc$$

3.237 Clear and Set Signals

$$Yc = Buc\ C17\ (T6 + T5) + Yh\ \overline{Yf}\ (T3 - T0) + St$$
$$Ys = Buc\ C17\ (T3 - T0)$$

3.238 Clock Counter

$$sY6 = \overline{Y5}\ Ecy\ T8\ \overline{\overline{Y10}\ \overline{Y11}\ \overline{Y12}\ \overline{Y13}\ \overline{Y14}}$$
$$rY6 = Y5\ T0 + Yc$$

$$sY5 = \overline{Y5}\ Y6\ \overline{Ecy}\ T0 + Ys\ C13\ C18\ T0\ \overline{\overline{Y10}\ \overline{Y11}\ \overline{Y12}\ \overline{Y13}\ \overline{Y14}}$$
$$rY5 = Y4\ T0 + Yc$$

$$sY4 = Y5\ Yf\ T8\ \overline{Yg} + Ys\ T0 + Yh\ Yf\ T8 + Iyg\ \overline{Y9}\ \overline{Iyi}\ Y5\ Iyf\ T8 + Iyg\ Yg\ Yf\ Y0\ \overline{Yev}\ Iy\ T8\ \overline{\overline{Y7}\ \overline{Y9}\ Y10\ Y11\ \overline{Yh}}$$
$$rY4 = Y4\ T0 + Y4\ T8$$

3.239 Character Counter

$$sY8 = Ys\ C16 + Y7\ \overline{Y8}\ Y4\ T0 + Yxx\ Yn2\ (\overline{T7 - T0})\ \overline{Y4} + \overline{Y7}\ \overline{Y9}\ Y10\ Y11\ \overline{Yh}$$
$$rY8 = Yc + Y8\ Y4\ T0$$

$$sY7 = Ys\ C15 + Yxx\ Yn1\ (\overline{T7 - T0})\ Y4$$
$$rY7 = Yc + Y7\ \overline{Y8}\ Y4\ T0$$

3.240 Character Counter Even

$$Yev = Y8\ Yn2\ Y7\ Yn1 + \overline{Y8}\ \overline{Yn2}\ Y7\ Yn1 + \overline{Y8}\ Yn2\ \overline{Y7}\ \overline{Yn1} + Y8\ Yn2\ \overline{Y7}\ \overline{Yn1}$$

3.241 Halt Interlock

sY0 = $\overline{Y9}$ Y6 $\overline{Y8}$ Ecy
+ Ys C18 Y9

rY0 = Yc
+ (Ioc C12 C17 $\overline{C19}$ $\overline{C20}$ $\overline{C21}$ $\overline{C22}$ $\overline{C23}$) Y9 T0
+ Y9 Iy Iyf ($\overline{Iyg}$ + $\overline{Iyh}$ + $\overline{Iyi}$) $\overline{T7 - T0}$

3.242 Computer Interlock

sYf = Yc $\overline{Yh}$
+ Iya $\overline{Mit}$ T0
+ Rx T0 $\overline{Pwy}$ * ($\overline{Pwy}$ = $\overline{05}$ for 92210)

rYf = $\overline{Y7}$ $\overline{Y8}$ Y4 (T6 + T5)
+ Ys C18
+ $\overline{Y9}$ Y10 Y11 Y0 Mtgy $\overline{Y7}$ (T6 + T5) $\overline{Yh}$

*Rx is always false for TMCC-D

3.243 End-of-Record Detector

sYg = Mtgy T0 Iyg Y11 (Y0 $\overline{Y9}$ + $\overline{Y0}$ Y5 $\overline{Y6}$ Y9)
+ Yhs $\overline{T7 - T0}$ $\overline{Y10}$ $\overline{Y11}$ $\overline{Y12}$ $\overline{Y13}$ $\overline{Y14}$
+ $\overline{Y9}$ $\overline{Y10}$ $\overline{Y11}$ Y12 $\overline{Y13}$ ($\overline{Ry1}$ $\overline{Ry2}$ $\overline{Ry3}$ $\overline{Ry4}$ $\overline{Ry5}$ $\overline{Ry6}$ $\overline{Ryp}$) Y5 $\overline{T7 - T0}$ $\overline{Y10}$ $\overline{Y11}$ $\overline{Y12}$ $\overline{Y13}$ $\overline{Y14}$

rYg = Yc
+ Yg $\overline{Iyg}$ Y11 T0

3.244 Halt Detector

sYh = Yg $\overline{Iyg}$ T8
+ Yhs Y11 T8
+ Yg $\overline{Y9}$ $\overline{Y11}$ $\overline{Iyh}$ (Iyf + Yev Yf) T8 Iyg
+ Y9 $\overline{Y11}$ $\overline{Y0}$ Y5 $\overline{Y6}$ ($\overline{Iyg}$ + Iyi $\overline{Iyh}$) T8
+ $\overline{Y9}$ $\overline{Y11}$ Iyg $\overline{Iyh}$ Iyi Iyf T8 Y0
+ Y9 $\overline{Iyh}$ Yhs T8

rYh = Yc (T6 + T5)
+ Yh $\overline{Yf}$ T8

3.245 Signal Complete

sYsc = Yg Iyg Iyh (Yev Yf + Iyf) T8
+ Yh $\overline{Yf}$ T8 + St
+ Ys $\overline{C19}$ $\overline{C20}$ $\overline{C21}$ $\overline{C22}$ $\overline{C23}$

rYsc = Ysc T0 $\overline{Iyg}$

3.246 Interrupt Signals

I1y = $\overline{Yf}$ Y0 $\overline{Yh}$ (En + $\overline{En}$) $\overline{Iy}$ $\overline{Ey}$ $\overline{Iyg}$
+ Iyg $\overline{Iy}$ Iyf Iyk

I2y = (En + $\overline{En}$) $\overline{Iyg}$ Yh $\overline{Yf}$
+ Ysc Iyj Iyg

3.247 YIM + MIY Interlock =

$\overline{Yf}$ (Y0 + $\overline{Y9}$)

3.248 Load Buffer from C

Yxx = Rx $\overline{Pwy}$ + Ryx Tsr Iy * ($\overline{Pwy}$ = $\overline{05}$ and Iy deleted for 92210)

*Rx is always false for TMCC-D

3.249 Time Share Request

Trqy = $\overline{Yf}$ Y0 Yh Iy $\overline{Iyf}$

3.250 Time Share Select

sRyx = $\overline{Tsm}$ Trqy $\overline{Trqx}$ ($\overline{T7 - T0}$)

rRyx = $\overline{Tsm}$ T0

3.251 Time Share Priority

Trqx = Priority Signal from TMCC-C and TMCC-D

Trqx = Trq(c) + Trq(d)

Trq = Trqx + Trqw + Trqy

3.252 Y Register

Yw1 = Y4 Y7 ($\overline{T7 - T0}$)
+ $\overline{Y4}$ Yn1 ($\overline{T7 - T0}$)
+ $\overline{Y4}$ Yn1 $\overline{Yxx}$

$$+ Y4\,Yb1\,(T7 - T0)\ *$$
$$+ \overline{Y4}\,C21r\,(T7 - T0)\,Yxx$$

$$Yw2 = Y4\,Y8\,(\overline{T7 - T0})$$
$$+ \overline{Y4}\,Yn2\,(\overline{T7 - T0})$$
$$+ \overline{Y4}\,Yn2\,\overline{Yxx}$$
$$+ Y4\,Yb2\,(T7 - T0)\ *$$
$$+ \overline{Y4}\,C23r\,(T7 - T0)\,Yxx$$

$$Yw3 = \overline{Y4}\,Yn3\,\overline{Yxx}$$
$$+ Y4\,Yb3\ *$$
$$+ \overline{Y4}\,C23r\,Yxx$$

sYr1,2,3 = Yw1, 2, 3 delayed by 9 pulse times

sYn1,2,3 = Yr1, 2, 3 respectively

$$* \begin{aligned} Yb1 &= \overline{Yx12}\,\overline{Yx24}\,Ry4 + Yx12\,Ry10 \\ &\quad + Yx24\,Ry22 \\ Yb2 &= \overline{Yx12}\,\overline{Yx24}\,Ry5 + Yx12\,Ry11 \\ &\quad + Yx24\,Ry23 \\ Yb3 &= \overline{Yx12}\,\overline{Yx24}\,Ry6 + Yx12\,Ry12 \\ &\quad + Yx24\,Ry24 \end{aligned} \Bigg\} \text{ for 93221}$$

Yb1, 2, 3 equals Ry4, 5, 6 respectively for 92210

Yb1, 2, 3 equals Ry10, 11, 12 respectively for 92211

Yb1, 2, 3 equals Ry22, 23, 24 respectively for 92212

3.253 Character Buffer Extended to 12 Bits

$$sRy7 = Y4\,\overline{Ry7}\,Ry4 + \overline{Y9}\,Y6\,\overline{Y5}\,Zy7$$
$$rRy7 = Y4\,Ry7\,\overline{Ry4} + \overline{Y9}\,\overline{Y6}\,\overline{Y5}\,\overline{Y4}$$

$$sRy8 = Y4\,\overline{Ry8}\,Ry5 + \overline{Y9}\,Y6\,\overline{Y5}\,Zy8$$
$$rRy8 = Y4\,Ry8\,\overline{Ry5} + \overline{Y9}\,\overline{Y6}\,\overline{Y5}\,\overline{Y4}$$

$$sRy9 = Y4\,\overline{Ry9}\,Ry6 + \overline{Y9}\,Y6\,\overline{Y5}\,Zy9$$
$$rRy9 = Y4\,Ry9\,\overline{Ry6} + \overline{Y9}\,\overline{Y6}\,\overline{Y5}\,\overline{Y4}$$

$$sRy10 = Y4\,\overline{Ry10}\,Ry7 + \overline{Y9}\,Y6\,\overline{Y5}\,Zy10$$
$$rRy10 = Y4\,Ry10\,\overline{Ry7} + \overline{Y9}\,\overline{Y6}\,\overline{Y5}\,\overline{Y4}$$

$$sRy11 = Y4\,\overline{Ry11}\,Ry8 + \overline{Y9}\,Y6\,\overline{Y5}\,Zy11$$
$$rRy11 = Y4\,Ry11\,\overline{Ry8} + \overline{Y9}\,\overline{Y6}\,\overline{Y5}\,\overline{Y4}$$

$$sRy12 = Y4\,\overline{Ry12}\,Ry9 + \overline{Y9}\,Y6\,\overline{Y5}\,Zy12$$
$$rRy12 = Y4\,Ry12\,\overline{Ry9} + \overline{Y9}\,\overline{Y6}\,\overline{Y5}\,\overline{Y4}$$

3.254 Character Buffer *

$$sRy1 = Y4\,\overline{Yxx}\,(T7 - T0)\,Yn1 + \overline{Y9}\,Y6\,\overline{Y5}\,Zy1 + Y4\,Yxx\,C21r$$
$$rRy1 = Y4\,\overline{Yxx}\,\overline{Yn1} + \overline{Y9}\,\overline{Y6}\,\overline{Y5}\,\overline{Y4} + Y4\,Yxx\,\overline{C21r}$$

$$sRy2 = Y4\,\overline{Yxx}\,(T7 - T0)\,Yn2 + \overline{Y9}\,Y6\,\overline{Y5}\,Zy2 + Y4\,Yxx\,C22r$$
$$rRy2 = Y4\,\overline{Yxx}\,\overline{Yn2} + \overline{Y9}\,\overline{Y6}\,\overline{Y5}\,\overline{Y4} + Y4\,Yxx\,\overline{C22r}$$

$$sRy3 = Y4\,\overline{Yxx}\,(T7 - T0)\,Yn3 + \overline{Y9}\,Y6\,\overline{Y5}\,Zy3 + Y4\,Yxx\,C23r$$
$$rRy3 = Y4\,\overline{Yxx}\,\overline{Yn3} + \overline{Y9}\,\overline{Y6}\,\overline{Y5}\,\overline{Y4} + Y4\,Yxx\,\overline{C23r}$$

$$sRy4 = Y4\,\overline{Ry4}\,Ry1 + \overline{Y9}\,Y6\,\overline{Y5}\,Zy4$$
$$rRy4 = Y4\,Ry4\,\overline{Ry1} + \overline{Y9}\,\overline{Y6}\,\overline{Y5}\,\overline{Y4}$$

$$sRy5 = Y4\,\overline{Ry5}\,Ry2 + \overline{Y9}\,Y6\,\overline{Y5}\,Zy5$$
$$rRy5 = Y4\,Ry5\,\overline{Ry2} + \overline{Y9}\,\overline{Y6}\,\overline{Y5}\,\overline{Y4}$$

$$sRy6 = Y4\,\overline{Ry6}\,Ry3 + \overline{Y9}\,Y6\,\overline{Y5}\,Zy6$$
$$rRy6 = Y4\,Ry6\,\overline{Ry3} + \overline{Y9}\,\overline{Y6}\,\overline{Y5}\,\overline{Y4}$$

* For 12-bit extension, add Ry7 through Ry12
For 24-bit extension, add Ry7 through Ry24

Character Size

12 bit character = Yx12 (93221 only)

24 bit character = Yx24 (93221 only)

3.255 Character Buffer Extended to 24 bits

$$sRy13 = Y4\,\overline{Ry13}\,Ry10 + \overline{Y9}\,Y6\,\overline{Y5}\,Zy13$$
$$rRy13 = Y4\,Ry13\,\overline{Ry10} + \overline{Y9}\,\overline{Y6}\,\overline{Y5}\,\overline{Y4}$$

$$sRy14 = Y4\,\overline{Ry14}\,Ry11 + \overline{Y9}\,Y6\,\overline{Y5}\,Zy14$$
$$rRy14 = Y4\,Ry14\,\overline{Ry11} + \overline{Y9}\,\overline{Y6}\,\overline{Y5}\,\overline{Y4}$$

sRy15 = Y4 $\overline{Ry15}$ Ry12 + $\overline{Y9}$ Y6 $\overline{Y5}$ Zy15
rRy15 = Y4 Ry15 $\overline{Ry12}$ + $\overline{Y9}$ $\overline{Y6}$ $\overline{Y5}$ $\overline{Y4}$

sRy16 = Y4 $\overline{Ry16}$ Ry13 + $\overline{Y9}$ Y6 $\overline{Y5}$ Zy16
rRy16 = Y4 Ry16 $\overline{Ry13}$ + $\overline{Y9}$ $\overline{Y6}$ $\overline{Y5}$ $\overline{Y4}$

sRy17 = Y4 $\overline{Ry17}$ Ry14 + $\overline{Y9}$ Y6 $\overline{Y5}$ Zy17
rRy17 = Y4 Ry17 $\overline{Ry14}$ + $\overline{Y9}$ $\overline{Y6}$ $\overline{Y5}$ $\overline{Y4}$

sRy18 = Y4 $\overline{Ry18}$ Ry15 + $\overline{Y9}$ Y6 $\overline{Y5}$ Zy18
rRy18 = Y4 Ry18 $\overline{Ry15}$ + $\overline{Y9}$ $\overline{Y6}$ $\overline{Y5}$ $\overline{Y4}$

sRy19 = Y4 $\overline{Ry19}$ Ry16 + $\overline{Y9}$ Y6 $\overline{Y5}$ Zy19
rRy19 = Y4 Ry19 $\overline{Ry16}$ + $\overline{Y9}$ $\overline{Y6}$ $\overline{Y5}$ $\overline{Y4}$

sRy20 = Y4 $\overline{Ry20}$ Ry17 + $\overline{Y9}$ Y6 $\overline{Y5}$ Zy20
rRy20 = Y4 Ry20 $\overline{Ry17}$ + $\overline{Y9}$ $\overline{Y6}$ $\overline{Y5}$ $\overline{Y4}$

sRy21 = Y4 $\overline{Ry21}$ Ry18 + $\overline{Y9}$ Y6 $\overline{Y5}$ Zy21
rRy21 = Y4 Ry21 $\overline{Ry18}$ + $\overline{Y9}$ $\overline{Y6}$ $\overline{Y5}$ $\overline{Y4}$

sRy22 = Y4 $\overline{Ry22}$ Ry19 + $\overline{Y9}$ Y6 $\overline{Y5}$ Zy22
rRy22 = Y4 Ry22 $\overline{Ry19}$ + $\overline{Y9}$ $\overline{Y6}$ $\overline{Y5}$ $\overline{Y4}$

sRy23 = Y4 $\overline{Ry23}$ Ry20 + $\overline{Y9}$ Y6 $\overline{Y5}$ Zy23
rRy23 = Y4 Ry23 $\overline{Ry20}$ + $\overline{Y9}$ $\overline{Y6}$ $\overline{Y5}$ $\overline{Y4}$

sRy24 = Y4 $\overline{Ry24}$ Ry21 + $\overline{Y9}$ Y6 $\overline{Y5}$ Zy24
rRy24 = Y4 Ry24 $\overline{Ry21}$ + $\overline{Y9}$ $\overline{Y6}$ $\overline{Y5}$ $\overline{Y4}$

3.256 Parity Flip-Flop

sRyp = $\overline{Y9}$ Y4 $\overline{Ryp}$ (Yb1 ⊕ Yb2 ⊕ Yb3) (T7-T0) Qy1*
+ Y9 Y4 $\overline{Ryp}$ $\overline{Yxx}$ (Yn1 ⊕ Yn2 ⊕ Yn3) Qy2 (T7 - T0) *
+ Y9 Y4 $\overline{Ryp}$ Yxx Cpr Qy2 (T7 - T0)*
+ $\overline{Y9}$ Y6 $\overline{Y5}$ Zyp
+ Yf Y5 T8 $\overline{Ryp}$

rRyp = $\overline{Y9}$ Y4 Ryp (Yb1 ⊕ Yb2 ⊕ Yb3) (T7 - T0) Qy1 *
+ Y9 Y4 Ryp $\overline{Yxx}$ (Yn1 ⊕ Yn2 ⊕ Yn3) Qy2 (T7 - T0)*
+ Y9 Y4 Ryp Yxx Cpr Qy2 (T7 - T0)*
+ $\overline{Y9}$ $\overline{Y6}$ $\overline{Y5}$ $\overline{Y4}$
+ Yf Y5 T8 $\overline{Y9}$ Ryp
+ Yc

* Qy1 = $\overline{Yx12\ \overline{Qr4} + \overline{Yx12}\ \overline{Yx24}\ \overline{Qr1}\ \overline{Qr4}}$ for 93221
Qy2 = Yx12 Qr4 + $\overline{Yx12}$ $\overline{Yx24}$ $\overline{Qr2}$ $\overline{Qr4}$ for 93221
Qy1 = Qr1 Qr4 for 92210
Qy1 = Qr4 for 92211
Qr1 is deleted for 92212
Qy2 = Qr2 $\overline{Qr4}$ for 92210
Qy2 = $\overline{Qr4}$ for 92211
Qy2 is deleted for 92212

3.257 Error Detector

sYe = $\overline{Y9}$ $\overline{Y6}$ $\overline{Y5}$ $\overline{Y4}$ Ryp $\overline{Yg}$ Npy ($\overline{Iyg}$ + Iyi + $\overline{Iyf}$)
+ Y0 $\overline{Y6}$ Y5 Ecy T8
+ Yes

rYe = Yc $\overline{Yh}$

3.258 Interlace Prepare

sEy = Iyc $\overline{Ey}$ (T3 - T0)
rEy = Yc T0
+ Pot 1 (T3 - T0) Ey

3.259 Interlace Clear

Iyc = Eom C9 $\overline{C10}$ $\overline{C1}$ C17 (T3 - T0)*

*$\overline{C1}$ becomes C1 for TMCC-D

3.260 Interlace Load

Iyp = Pot 1 (T6 + T5) Ey
Iye = Ioc 1 Ey (T6 + T5)

3.261 Interlace Active

sIy = Pot 1 (T3 - T0) Ey $\overline{Iy}$
rIy = Iyf T8
+ (Yc + Iyc + Ys $\overline{C19}$ $\overline{C20}$ $\overline{C21}$ $\overline{C22}$ $\overline{C23}$) (T3 - T0) Iy

3.262 Zero Count

Iyf = Yc0 Yc1 Yc2 Yc3 Yc4 Yc5 Yc6 Yc7
Yc8 Yc9 Yc10 Yc11 Yc12 Yc13 Yc14 $\overline{Ey}$

3.263 Interlace Count Trigger

Iya = Ryx Tsm

3.264 Interlace Counter Clock Enables

Computer Clock Enable: Ey $\overline{Iy}$
Counter Clock Enable: $\overline{Ey}$

3.265 Extend Operations

sIyg = Iye C12
rIyg = Iyc + Ysc T8 $\overline{Y10}$ $\overline{Y11}$ $\overline{Y12}$ $\overline{Y13}$ $\overline{Y14}$ Iyg

3.266 Channel Command Interrupt Enables

sIyj = Iye C13
rIyj = Iyc + I2y T8 Iyj

sIyk = Iye C14
rIyk = Iyc + I1y T8 Iyk

3.267 Channel Command Register

sIyh = Iye C15
rIyh = Iyc

sIyi = Iye C16
rIyi = Iyc

3.268 Word Counter

sYc14 = Iyc + $\overline{Ey}$ $\overline{Yc14}$ Iya $\overline{Ey}$
rYc14 = Iyp C9 + $\overline{Ey}$ Yc14 Iya $\overline{Ey}$

sYc13 = Iyc + $\overline{Ey}$ $\overline{Yc13}$ Yc14 $\overline{Ey}$
rYc13 = Iyp C8 + $\overline{Ey}$ Yc13 Yc14 $\overline{Ey}$

sYc12 = Iyc + $\overline{Ey}$ $\overline{Yc12}$ Yc13 Yc14 $\overline{Ey}$
rYc12 = Iyp C7 + $\overline{Ey}$ Yc12 Yc13 Yc14 $\overline{Ey}$

sYc11 = Iyc + $\overline{Ey}$ $\overline{Yc11}$ Yc12 Yc13 Yc14 $\overline{Ey}$
rYc11 = Iyp C6 + $\overline{Ey}$ Yc11 Yc12 Yc13 Yc14 $\overline{Ey}$

sYc10 = Iyc + $\overline{Ey}$ $\overline{Yc10}$ Yc11 $\overline{Ey}$
rYc10 = Iyp C5 + $\overline{Ey}$ Yc10 Yc11 $\overline{Ey}$

sYc9 = Iyc + $\overline{Ey}$ $\overline{Yc9}$ Yc10 Yc11 $\overline{Ey}$
rYc9 = Iyp C4 + $\overline{Ey}$ Yc9 Yc10 Yc11 $\overline{Ey}$

sYc8 = Iyc + $\overline{Ey}$ $\overline{Yc8}$ Yc9 Yc10 Yc11 $\overline{Ey}$
rYc8 = Iyp C3 + $\overline{Ey}$ Yc8 Yc9 Yc10 Yc11 $\overline{Ey}$

sYc7 = Iyc + $\overline{Ey}$ $\overline{Yc7}$ Yc8 $\overline{Ey}$
rYc7 = Iyp C2 + $\overline{Ey}$ Yc7 Yc8 $\overline{Ey}$

sYc6 = Iyc + $\overline{Ey}$ $\overline{Yc6}$ Yc7 Yc8 $\overline{Ey}$
rYc6 = Iyp C1 + $\overline{Ey}$ Yc6 Yc7 Yc8 $\overline{Ey}$

sYc5 = Iyc + $\overline{Ey}$ $\overline{Yc5}$ Yc6 Yc7 Yc8 $\overline{Ey}$
rYc5 = Iyp C0 + $\overline{Ey}$ Yc5 Yc6 Yc7 Yc8 $\overline{Ey}$

sYc4 = Iyc + $\overline{Ey}$ $\overline{Yc4}$ Yc5 $\overline{Ey}$
rYc4 = Iye C23 + $\overline{Ey}$ Yc4 Yc5 $\overline{Ey}$

sYc3 = Iyc + $\overline{Ey}$ $\overline{Yc3}$ Yc4 Yc5 $\overline{Ey}$
rYc3 = Iye C22 + $\overline{Ey}$ Yc3 Yc4 Yc5 $\overline{Ey}$

sYc2 = Iyc + $\overline{Ey}$ $\overline{Yc2}$ Yc3 Yc4 Yc5 $\overline{Ey}$
rYc2 = Iye C21 + $\overline{Ey}$ Yc2 Yc3 Yc4 Yc5 $\overline{Ey}$

sYc1 = Iyc + $\overline{Ey}$ $\overline{Yc1}$ Yc2 $\overline{Ey}$
rYc1 = Iye C20 + $\overline{Ey}$ Yc1 Yc2 $\overline{Ey}$

sYc0 = Iyc + $\overline{Ey}$ $\overline{Yc0}$ Yc1 Yc2 $\overline{Ey}$
rYc0 = Iye C19

3.269 Address Counter

sYa14 = Iyc + $\overline{Ey}$ $\overline{Ya14}$ Iya $\overline{Ey}$
rYa14 = Iyp $\overline{C23}$ + $\overline{Ey}$ Ya14 Iya $\overline{Ey}$

sYa13 = Iyc + $\overline{Ey}$ $\overline{Ya13}$ Ya14 Iya $\overline{Ey}$
rYa13 = Iyp $\overline{C22}$ + $\overline{Ey}$ Ya13 Ya14 Iya $\overline{Ey}$

sYa12 = Iyc + $\overline{Ey}$ $\overline{Ya12}$ Ya13 $\overline{Ey}$
rYa12 = Iyp $\overline{C21}$ + $\overline{Ey}$ Ya12 Ya13 $\overline{Ey}$

sYa11 = Iyc + $\overline{Ey}$ $\overline{Ya11}$ Ya12 Ya13 $\overline{Ey}$
rYa11 = Iyp $\overline{C20}$ + $\overline{Ey}$ Ya11 Ya12 Ya13 $\overline{Ey}$

sYa10 = Iyc + $\overline{Ey}$ $\overline{Ya10}$ Ya11 Ya12 Ya13 $\overline{Ey}$
rYa10 = Iyp $\overline{C19}$ + $\overline{Ey}$ Ya10 Ya11 Ya12 Ya13 $\overline{Ey}$

$$sYa9 = Iyp\ C18 + \overline{Ey}\ \overline{Ya9}\ Ya10\ \overline{Ey}$$
$$rYa9 = Iyc + \overline{Ey}\ Ya9\ Ya10\ \overline{Ey}$$

$$sYa8 = Iyp\ C17 + \overline{Ey}\ \overline{Ya8}\ Ya9\ Ya10\ \overline{Ey}$$
$$rYa8 = Iyc + \overline{Ey}\ Ya8\ Ya9\ Ya10\ \overline{Ey}$$

$$sYa7 = Iyp\ C16 + \overline{Ey}\ \overline{Ya7}\ Ya8\ Ya9\ Ya10\ \overline{Ey}$$
$$rYa7 = Iyc + \overline{Ey}\ Ya7\ Ya8\ Ya9\ Ya10\ \overline{Ey}$$

$$sYa6 = Iyp\ C15 + \overline{Ey}\ \overline{Ya6}\ Ya7\ \overline{Ey}$$
$$rYa6 = Iyc + \overline{Ey}\ Ya6\ Ya7\ \overline{Ey}$$

$$sYa5 = Iyp\ C14 + \overline{Ey}\ \overline{Ya5}\ Ya6\ Ya7\ \overline{Ey}$$
$$rYa5 = Iyc + \overline{Ey}\ Ya5\ Ya6\ Ya7\ \overline{Ey}$$

$$sYa4 = Iyp\ C13 + \overline{Ey}\ \overline{Ya4}\ Ya5\ Ya6\ Ya7\ \overline{Ey}$$
$$rYa4 = Iyc + \overline{Ey}\ Ya4\ Ya5\ Ya6\ Ya7\ \overline{Ey}$$

$$sYa3 = Iyp\ C12 + \overline{Ey}\ \overline{Ya3}\ Ya4\ \overline{Ey}$$
$$rYa3 = Iyc + \overline{Ey}\ Ya3\ Ya4\ \overline{Ey}$$

$$sYa2 = Iyp\ C11 + \overline{Ey}\ \overline{Ya2}\ Ya3\ Ya4\ \overline{Ey}$$
$$rYa2 = Iyc + \overline{Ey}\ Ya2\ Ya3\ Ya4\ \overline{Ey}$$

$$sYa1 = Iyp\ C10 + \overline{Ey}\ \overline{Ya1}\ Ya2\ Ya3\ Ya4\ \overline{Ey}$$
$$rYa1 = Iyc + \overline{Ey}\ Ya1\ Ya2\ Ya3\ Ya4\ \overline{Ey}$$

$$sYa0 = Iye\ C18 + \overline{Ey}\ \overline{Ya0}\ Ya1\ \overline{Ey}$$
$$rYa0 = Iyc$$

3.270 Pin Address Counter

$$sYpa = Ioc\ C17\ C13\ \overline{C19}\ \overline{C20}\ \overline{C21}\ \overline{C22}\ \overline{C23}\ T0$$
$$rYpa = Pin\ T0 + St$$

3.271 Skip Gate

$$Skr = \overline{C1}\ C17\ \overline{C9}\ \overline{C10}\ C11\ \overline{C19}\ \overline{C20}\ \overline{C21}\ \overline{C22}\ \overline{C23}\ C15\ Ysc^*$$
$$+ \overline{C1}\ C17\ \overline{C9}\ \overline{C10}\ C11\ \overline{C19}\ \overline{C20}\ \overline{C21}\ \overline{C22}\ \overline{C23}\ C12\ \overline{Y10}\ \overline{Y11}\ \overline{Y12}\ \overline{Y13}\ \overline{Y14}^*$$
$$+ \overline{C1}\ C17\ \overline{C9}\ \overline{C10}\ C11\ \overline{C19}\ \overline{C20}\ \overline{C21}\ \overline{C22}\ \overline{C23}\ C13\ Iyf^*$$
$$+ \overline{C1}\ C17\ \overline{C9}\ \overline{C10}\ C11\ \overline{C19}\ \overline{C20}\ \overline{C21}\ \overline{C22}\ \overline{C23}\ C14\ \overline{Ye}^*$$
$$+ C10\ \overline{C11}\ C13\ \overline{Y10}\ \overline{Y11}\ \overline{Y12}\ \overline{Y13}\ \overline{Y14}\ \overline{C1}^*$$
$$+ C10\ \overline{C11}\ C19\ \overline{Ye}\ \overline{C1}^*$$
$$+ - - -$$

*$\overline{C1}$ becomes C1 for TMCC-D

3.272 Input/Output Signals Received

$$Zyp = \overline{\overline{Zyp}}$$
$$Zy1 = \overline{\overline{Zy1}}$$
$$Zy2 = \overline{\overline{Zy2}}$$
$$Zy3 = \overline{\overline{Zy3}}$$
$$Zy4 = \overline{\overline{Zy4}}$$
$$Zy5 = \overline{\overline{Zy5}}$$
$$Zy6 = \overline{\overline{Zy6}}$$
$$Zy7 = \overline{\overline{Zy7}}$$
$$Zy8 = \overline{\overline{Zy8}}$$
$$Zy9 = \overline{\overline{Zy9}}$$
$$Zy10 = \overline{\overline{Zy10}}$$
$$Zy11 = \overline{\overline{Zy11}}$$
$$Zy12 = \overline{\overline{Zy12}}$$
$$Zy13 = \overline{\overline{Zy13}}$$
$$Zy14 = \overline{\overline{Zy14}}$$
$$Zy15 = \overline{\overline{Zy15}}$$
$$Zy16 = \overline{\overline{Zy16}}$$
$$Zy17 = \overline{\overline{Zy17}}$$
$$Zy18 = \overline{\overline{Zy18}}$$
$$Zy19 = \overline{\overline{Zy19}}$$
$$Zy20 = \overline{\overline{Zy20}}$$
$$Zy21 = \overline{\overline{Zy21}}$$
$$Zy22 = \overline{\overline{Zy22}}$$
$$Zy23 = \overline{\overline{Zy23}}$$

Yhs = $\overline{\text{Yhs}}$

Yes = $\overline{\text{Yes}}$

$\overline{\text{Mtgy}}$ = $\overline{\text{Mtgy}}$

$\overline{\text{Npy}}$ = $\overline{\text{Npy}}$

Ecy = $\overline{\text{Ecy}}$

Yx12 = $\overline{\text{Yx12}}$ (93221 only)

Yx24 = $\overline{\text{Yx24}}$ (93221 only)

3.273 Input/Output Signals Generated

Ryp = Ryp

Ry1 = Ry1

Ry2 = Ry2

Ry3 = Ry3

Ry4 = Ry4

Ry5 = Ry5

Ry6 = Ry6

Ry7 = Ry7

Ry8 = Ry8

Ry9 = Ry9

Ry10 = Ry10

Ry11 = Ry11

Ry12 = Ry12

Ry13 = Ry13

Ry14 = Ry14

Ry15 = Ry15

Ry16 = Ry16

Ry17 = Ry17

Ry18 = Ry18

Ry19 = Ry19

Ry20 = Ry20

Ry21 = Ry21

Ry22 = Ry22

Ry23 = Ry23

Ry24 = Ry24

Y9 = Y9

Y10 = Y10

Y11 = Y11

Y12 = Y12

Y13 = Y13

Y14 = Y14

Y0 = Y0

Y5 = Y5

Y6 = Y6

Iy = Iy

SECTION IV
INSTALLATION AND MAINTENANCE

4.1 GENERAL

4.2 This section contains information relating to the installation and maintenance of Model 932XX series TMCCs. As the Model 922XX series TMCCs are no longer being installed, only the Model 932XX series is covered in this section.

4.3 INSTALLATION

4.4 The basic 925/930/9300 computers are shipped with the TMCC physically installed. After installation of the computer, the intercabling of the TMCCs must be performed.

4.5 INTERCABLING

4.6 Figure 4-1 illustrates typical intercabling of the Model 93200 TMCC for the 925/930/9300 computers. Figure 4-2 illustrates the intercabling of the Model 93221 TMCC. Power distribution for the various chassis is illustrated in figure 4-3.

4.7 Intercabling of the input/output devices to the W (or A) channel may be found in the applicable input/output device technical manual.

4.8 After intercabling the TMCCs and the input/output devices, a program should be run to ensure proper operation of the W (or A) channel. Any diagnostic program utilizing the input/output device may be run.

4.9 925/930 COMPUTER W CHANNEL TEST PROGRAM

4.10 Table 4-1 lists a sample program which may be run to check out the W channel for proper operation. This test program causes the message ASSEMBLY DONE ENTER NEW PROGRAM to be typed out under program control. The computer stores the internal codes for these characters in memory beginning in location 2000. The routine inserts the carriage return code, 52, and the space code, 12, where needed and requests End-of-Record interrupt. It is written as a closed subroutine using interrupts, channel W and Typewriter Number One. The internal code for the output message is as follows:

A S S E 21 62 62 25	M B L Y 44 22 43 71	Sp D O N 12 24 46 45	E C/R E N 25 52 25 45	2000
T E R Sp 62 25 51 12	N E W Sp 45 25 66 12	P R O G 47 51 46 27	R A M Sp 51 21 44 12	2004

4.11 9300 COMPUTER A CHANNEL TEST PROGRAM

4.12 Table 4-2 lists a sample program which may be run to check out the A channel for proper operation. This test program causes the message ASSEMBLY DONE ENTER NEW PROGRAM to be typed out under program control. The computer internal codes for these characters are stored beginning in location 02000. The carriage return code, 052, and the space code, 012, are inserted where needed. The End-of-Record interrupt is requested. The routine is written as a closed subroutine which uses interrupts, channel A, and Typewriter Number One. The internal code for the output message is the same as given in paragraph 4.10.

4.13 MODULE LOCATION

4.14 Figure 4-4 illustrates the location of all modules for the various models of TMCCs.

4.15 MAINTENANCE

4.16 The following information is presented as an aid in maintaining the Models 932XX TMCCs. Presented herein are descriptions and timing diagrams of the signals available on the various input/output connectors and the diagnostic test programs for maintenance of the TMCC.

4.17 PERIODIC INSPECTION

4.18 No periodic inspection is required for the TMCC other than that required for the computer as a whole. No attempt should be made to periodically check for loose wires, poor solder connections, or bent pins because of the packaging density of the wiring and components and the possibility of causing malfunctions. Wiring layout and length is critical in some areas and should not be touched except for correcting a malfunction.

4.19 CORRECTIVE MAINTENANCE

4.20 If it should become necessary to replace a component on a module, the physical location of the component, quantity, type, and part number are indicated on the module drawings contained in Section 6.

4.21 INPUT/OUTPUT SIGNALS AND TIMING RELATIONSHIPS

4.22 The signals described are available on the input/output connectors as illustrated in figure 4-5. The signals are theoretical and do not take into consideration circuit and transmission delays which tend to add 200 to 400 nanoseconds of delay.

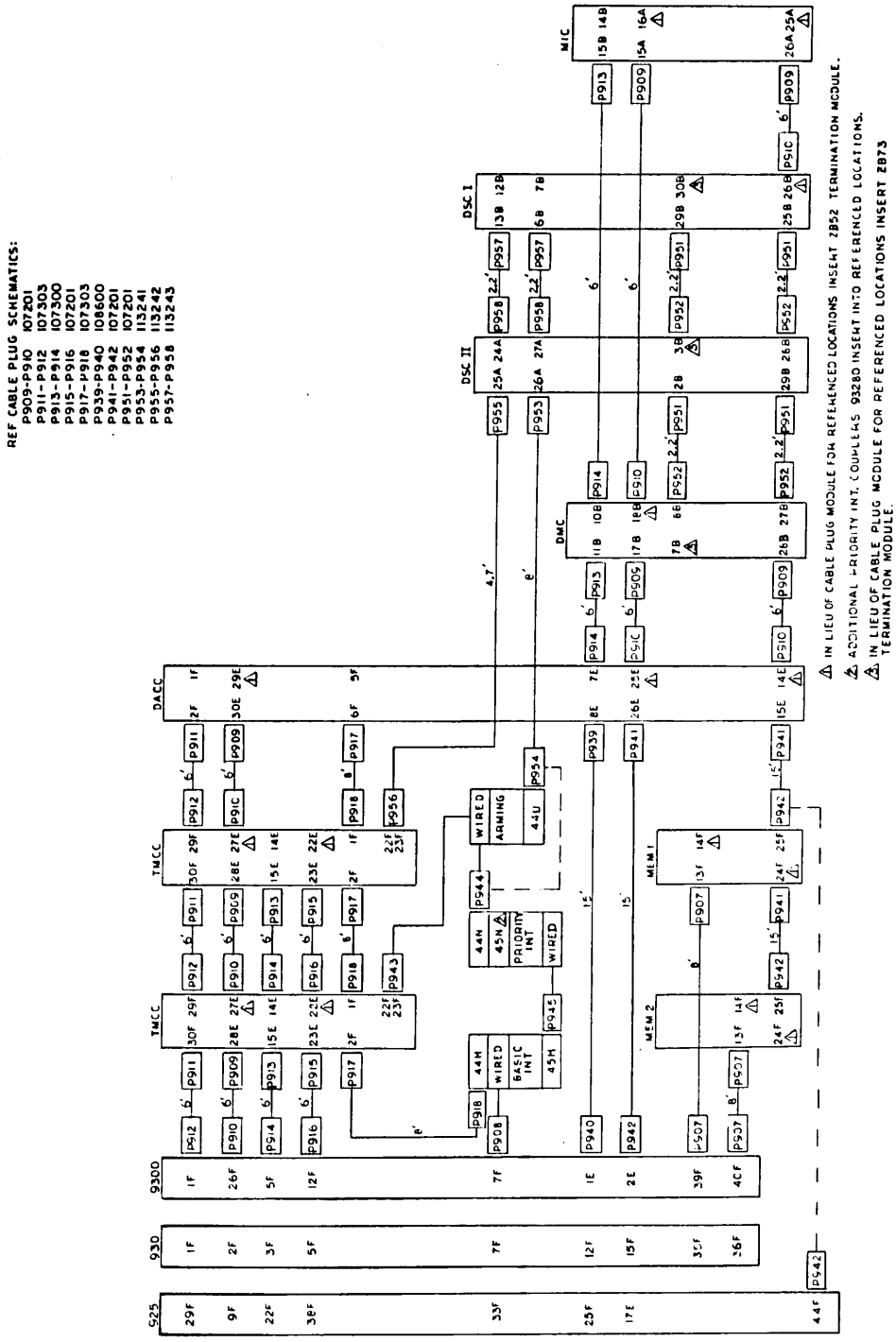

Figure 4-1. Model 93200 TMCC, Intercabling Diagram

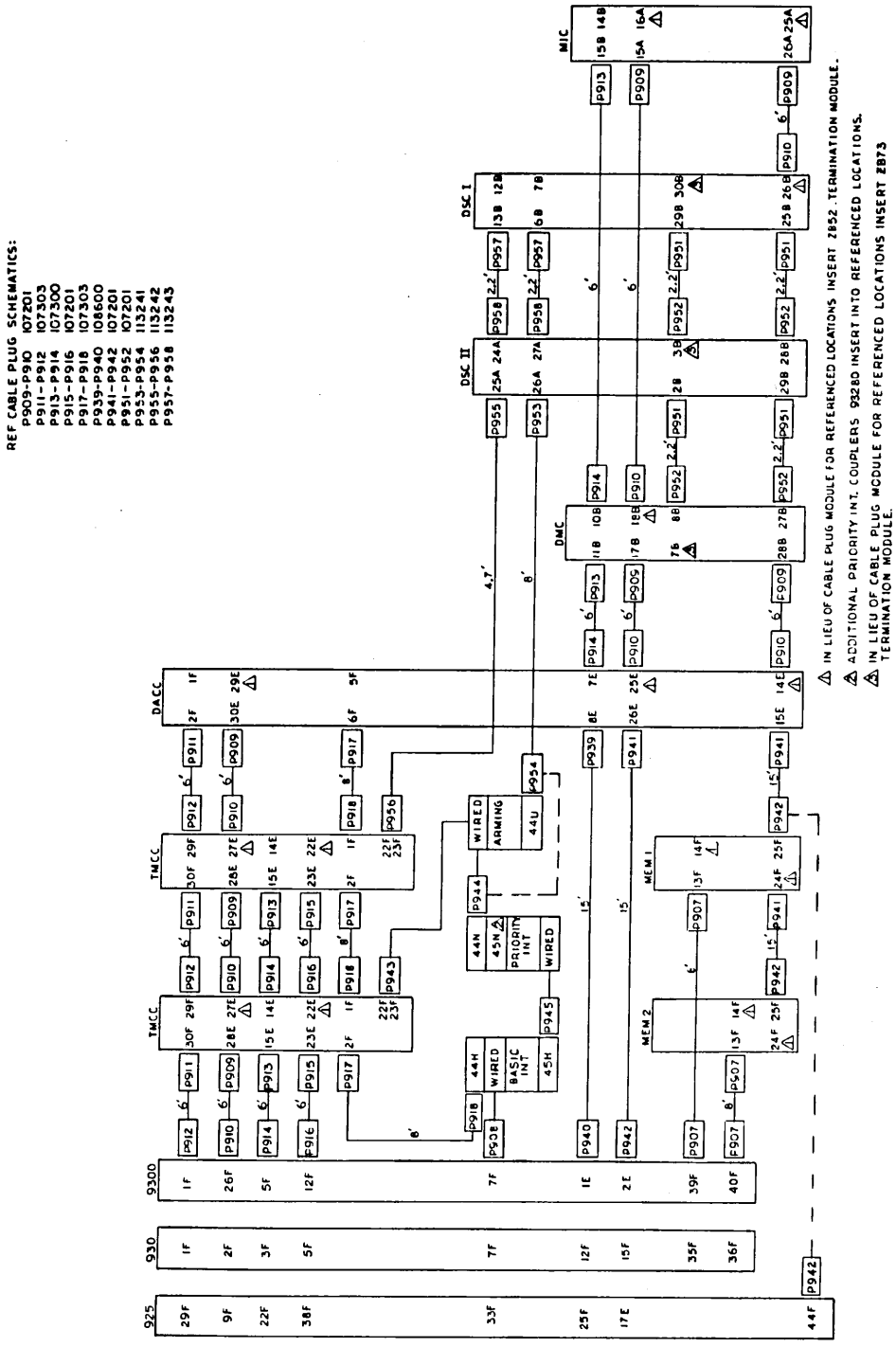

Figure 4-2. Model 93221 TMCC, Intercabling Diagram

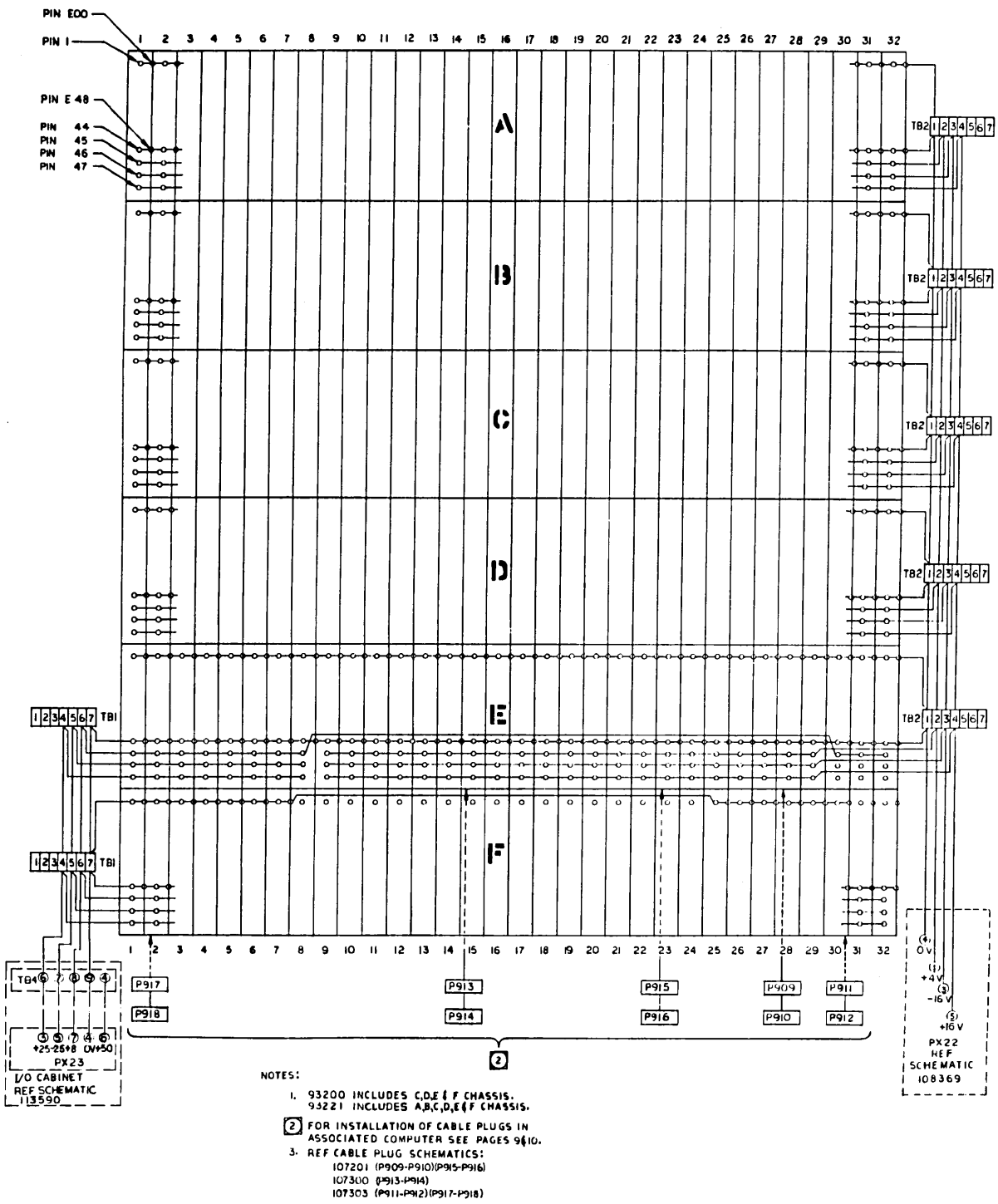

Figure 4-3. Power Distribution Diagram

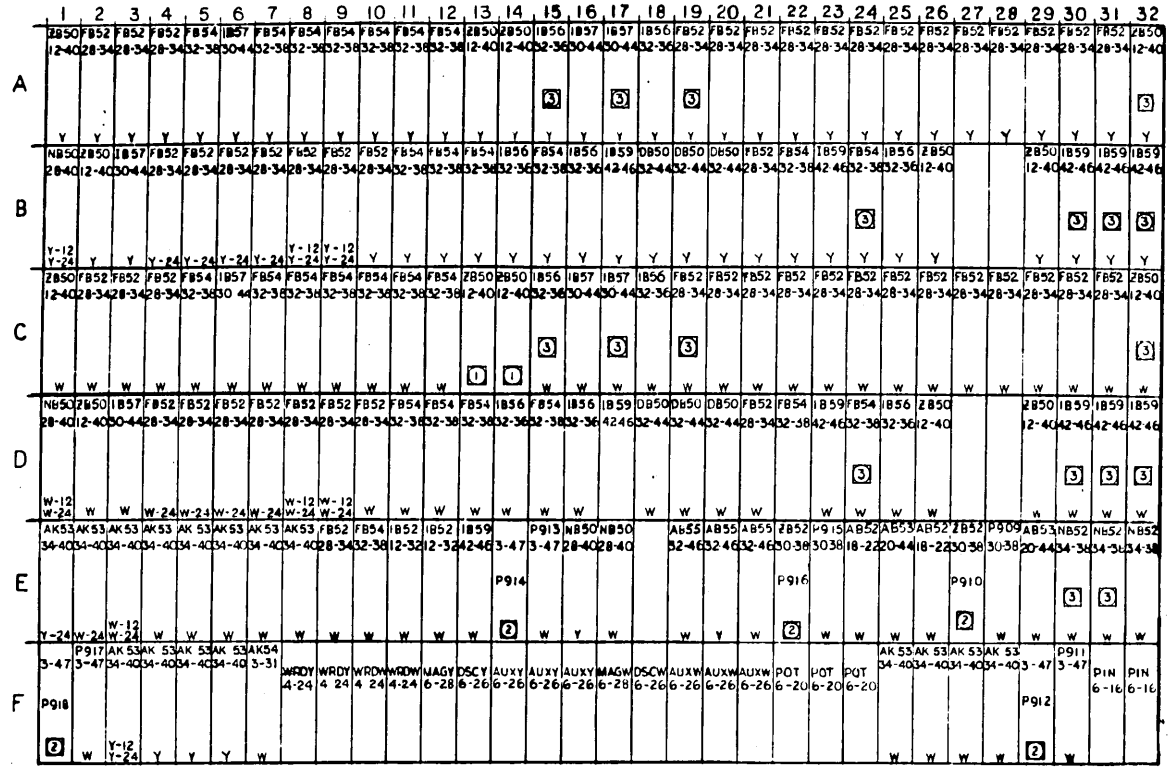

NOTE:

1 - W = Modules Required For 6 Bit W Buffer
2 - W12 = Modules Added To Convert 6 Bit W Buffer To 12 Bit W Buffer.
3 - W24 = Modules Added To Convert 6 Bit W Buffer To 24 Bit W Buffer.
4 - Y = Modules Required For 6 Bit Y Buffer Requires All W Modules
5 - Y12 = Modules Added To Convert 6 Bit Y Buffer To 12 Bit Y Buffer.
6 - Y24 = Modules Added To Convert 6 Bit Y Buffer To 24 Bit Y Buffer.

① These Modules Deleted When Y-TMCC Buffer Used With W-TMCC Buffer

② Add P910, P912, P914, P916, P918 When C and D Buffers are Added.

③ These Modules Used Only With The Interlace Option.

④ Use ZB 52, Where Indicated, When C and D Buffers are Not added.

Figure 4-4. Module Location Diagram

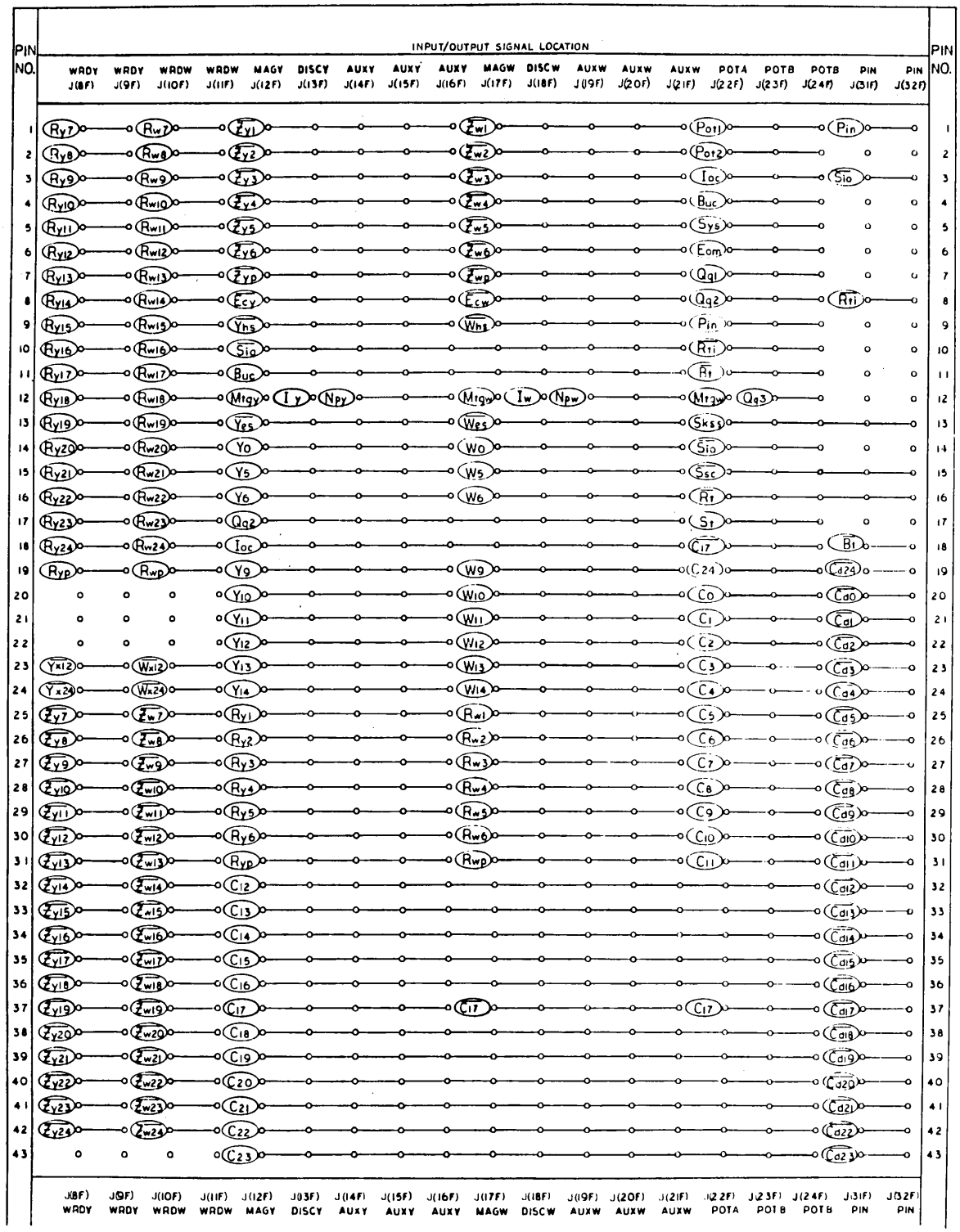

Figure 4-5. Input/Output Signal Location Diagram

Table 4-1. 925/930 Computers, W Channel Sample Test Program

Location	Instruction	Address	Comments
1000	PZE		This instruction is an assembler instruction, used as a convenient way to reserve the entry location for subroutine use.
	CLR		Clears the A and B Registers.
	STA	SWICH	Clears the location called SWICH. SWICH later indicates to the main program that output is complete.
	TYP	*0, 1, 4	Connects Typewriter Number One to channel W for output, specifies four characters per word mode, and alerts channel W interlace. The instruction is an EOM with octal configuration, 0 02 40641.
	EXU	WRITE	Causes the Input/Output EOM in location WRITE to be executed.
	POT	WRITE + 1	Sends the word count and starting address in WRITE + 1 to the channel.
	BRR	1000	Branches back to the main program.
WRITE	EOM 00403720	16200	Specifies output function code 00 and the End-of-Record interrupt. The word in WRITE + 1 specifies that eight words will output from memory beginning in location 2000. According to output function 00, when the word count equals zero during the transmission, the output terminates, and when the last character is out, the device disconnects and the interrupt occurs.
33	BRM	OKAY	Branches and marks to location OKAY elsewhere in memory.
OKAY	PZE		Saves the entry location
	MIN	SWICH	Increments location SWICH as an indicator for the main program.
	BRU	*OKAY	Branches to the main program and clears the active interrupt.

Table 4-2. 9300 Computer, A Channel Sample Test Program

Location	Instruction	Address	Comments
01000	PZE		This instruction is an assembler instruction used as a convenient way to reserve the entry location for subroutine use.
	STZ	SWICH	Clears the location called SWICH. SWICH is later used to indicate to the main program that output is complete.
	TYP	*0, 1, 4	Connects Typewriter Number One to channel A for output, specifies four characters per word mode, and alerts channel A interlace. The instruction is an EOM with octal configuration, 0 02 42641.
	EXU	WRITE	Causes the Input/Output Control EOM in location WRITE to be executed.
	POT	WRITE + 1	Sends the word count and starting address in WRITE + 1 to the channel.
	BRR	01000	Branches back to the main program.
WRITE	EOM 00403720	016200	Specifies output function code 01 (IOSD) and the End-of-Record interrupt. The word in WRITE + 1 specifies that eight words will be output from memory beginning in location 03720. According to output function 01 (IOSD) when the word count equals zero during the transmission, the device is disconnected when the last character is out and the interrupt then occurs.
011	BRM	OKAY	Branches and marks to location OKAY elsewhere in memory.
OKAY	PZE		Saves the entry location.
	MPO	SWICH	Increments location SWICH as an indicator for the main program.
	BRC	*OKAY	Branches to the main program and clears the active interrupt, level 011.

4.23 The logic terms for signals generated in the main frame referred to in these paragraphs represent the 930 computer logic equations. Although the 925 and 9300 computer implementation may differ somewhat from the 930 computer, the functions achieved are similar.

4.24 (Qq1), (Qq2), and (Qq3) (See figure 4-6)

4.25 (Qq1), (Qq2), and (Qq3) are clocking signals provided to external devices. They are functionally similar to the Q1 and Q2 signals provided to external equipment on the 910 and 920 computers. Signals (Qq1), (Qq2), and (Qq3) are derived from the Pulse Counter, Qr1 through Qr4, in the TMCC.

$$(Qq1) = Ts - T0$$

$$T5 - T0 = Qr3\ \overline{Qr1}\ \overline{Qr4}$$

$$(Qq2) = T6 - T3$$

$$T6 - T3 = Qr3\ Qr4 + Qr3\ \overline{Qr2}\ \overline{Qr1}$$

$$(Qq3) = T7 - T4$$

$$T7 - T4 = Qr4$$

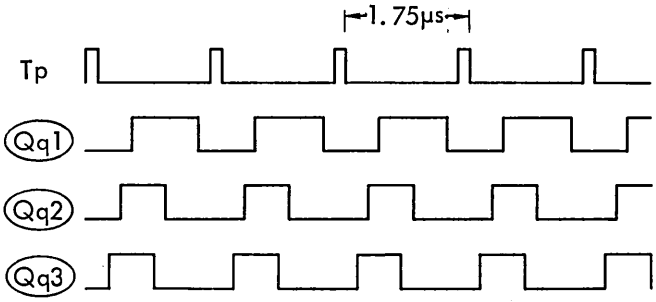

Figure 4-6. 930/9300 Timing Diagram, (Qq1), (Qq2), (Qq3)

4.26 (Eom), (Buc), (Ioc), (Sys) (See figure 4-7)

4.27 (Eom) is the execution signal for the EOM instruction.

$$(Eom) = Eom\ \overline{Er}$$

The term $\overline{Er}$ inhibits (Eom) during the interlace loading sequence. (Eom) is derived from the CPU and transmitted to the TMCC. (Eom) is true from T7 through Tr.

$$(Eom) = Q5\ \overline{01}\ \overline{04}\ 05\ \overline{Ts}\ (Q2 + Q5) + \ldots$$

$$Q2 + Q5 = T7 - Tr$$

During FILL operations, a pseudo Eom is generated.

$$(Eom) = Ix\ \overline{Go}\ \overline{Ht}\ (Kg)\ (A2 + Q5) + \ldots$$

The term $\overline{Ts}$ inhibits (Eom) during all time share operations.

4.28 (Buc) is a control signal derived from the EOM instruction and is used to activate the TMCC and peripheral devices. (Buc) is true from T7 through Tr.

$$(Buc) = Eom\ \overline{C10}\ \overline{C11}\ \overline{C1}$$

For TMCC channels C and D,

$$(Buc) = Eom\ \overline{C10}\ \overline{C11}\ C1$$

Peripheral devices must use $\overline{C17}$ and C17 to distinguish between channels W and Y and similarly, between channels C and D.

4.29 (Ioc) is an input/output control signal derived from the EOM instruction. (Ioc) is true from T6 through T0.

$$(Ioc) = Eom\ \overline{C10}\ C11\ \overline{C1}\ \overline{Er}\ Qr3$$

$$Qr3 = T6 - T0$$

For channels C and D,

$$(Ioc) = Eom\ \overline{C10}\ C11\ C1\ \overline{Er}\ Qr3$$

The term $\overline{Er}$ is used to inhibit (Ioc) during the interlace loading sequence. Peripheral devices must use $\overline{C17}$ and C17 to distinguish between channels W and Y, or similarly, between channels C and D.

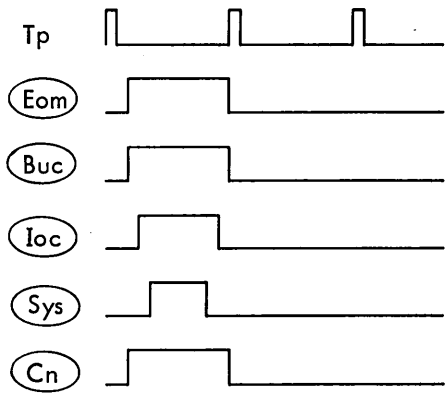

Figure 4-7. 930/9300 Timing Diagram, (Eom), (Buc), (Ioc), (Sys)

4.30 (Sys) is a control signal for systems communication derived from an EOM instruction. (Sys) is true from T5 through T1.

$$(Sys) = Eom\ C10\ C11\ \overline{C9}\ \overline{Tsr}\ (T5 - T1)$$

Systems devices must use $\overline{C17}$ and C17 to distinguish between channels W and Y, or similarly, between channels C and D. The term $\overline{Tsr}$ inhibits Sys during time-share operations with the TMCC.

4.31 (Pin), (Rt), (Cdn), (Rti)

(See figures 4-8, 4-9, and 4-10)

4.32 The PIN instruction permits direct parallel entry of up to 24-bits of data to memory via the C register. A "Ready for Input" signal, (Pin), is provided by the TMCC to external equipment.

$$(Pin) = Pin$$

$$Pin = \overline{F1}\ F2\ \overline{F3}\ 02\ 06\ \overline{Ts}\ Q1$$

$$Q1 = T7 - T0$$

While the Pin signal is true, the C register is first reset and then the external data, (Cdn), is strobed.

$$rCn = Cxi\ Q2$$

$$Cxi = \overline{F1}\ F2\ \overline{F3}\ 02\ 06\ \overline{Ts}\ Q1$$

$$Q2 = T7 - T3$$

$$sCn = Cxi\ Cdn$$

$$Cdn = (\overline{Cdn})$$

The process of resetting the C register and then strobing the data repeats until the external device provides a "Ready" indication by making (Rt) false. The data lines, (Cdn), must be in a stable condition prior to the time (Rt) goes false and should remain stable for the duration of the (Pin) signal. Until (Rt) goes false, the PIN instruction was locked in phase Ø2, but is now permitted to proceed to phase Ø4. A "PIN Complete" signal, (Rti), is generated and sent to the external device.

$$sRf = 06\ F2\ \overline{F3}\ Q2\ Rt + \ldots$$

$$Rt = (\overline{Rt})$$

$$sF1 = \overline{F1}\ \overline{F3}\ \overline{01}\ 03\ \overline{04}\ \overline{Ia}\ Rf\ Tp + \ldots$$

$$rF2 = \overline{F1}\ \overline{F3}\ \overline{01}\ 03\ \overline{04}\ \overline{Ia}\ Rf\ Tp + \ldots$$

$$Rti = \overline{\emptyset 4\ \overline{01}\ \overline{04}\ 06\ \overline{Ts}\ (Q2 + Q5)}$$

$$(Q2 + Q5) = T7 - Tr$$

$$(\overline{Rti}) = \overline{Rti}$$

If ($\overline{Rt}$) is always held false during the PIN instruction, the PIN instruction remains in phase Ø2 for only one cycle.

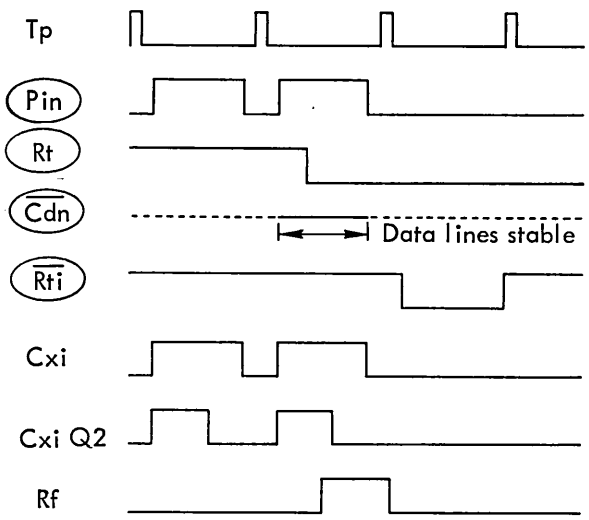

Figure 4-8. 930/9300 Timing Diagram, (Pin), (Rt), (Cdn), (Rti)

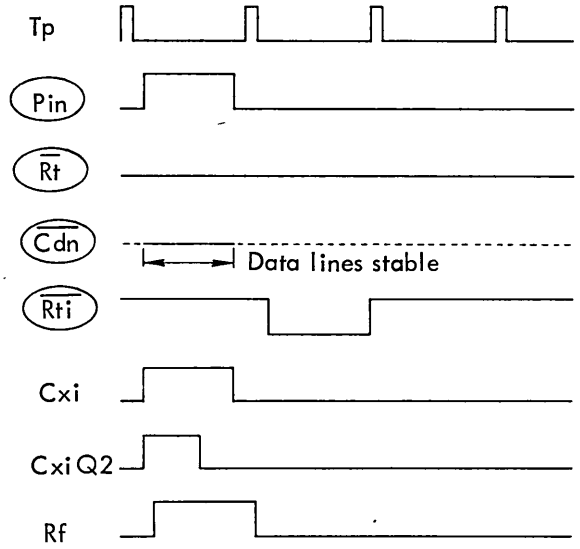

Figure 4-9. 930/9300 Timing Diagram, (Pin), ($\overline{Rt}$), (Cdn), (Rti), ($\overline{Rt}$) Initially False

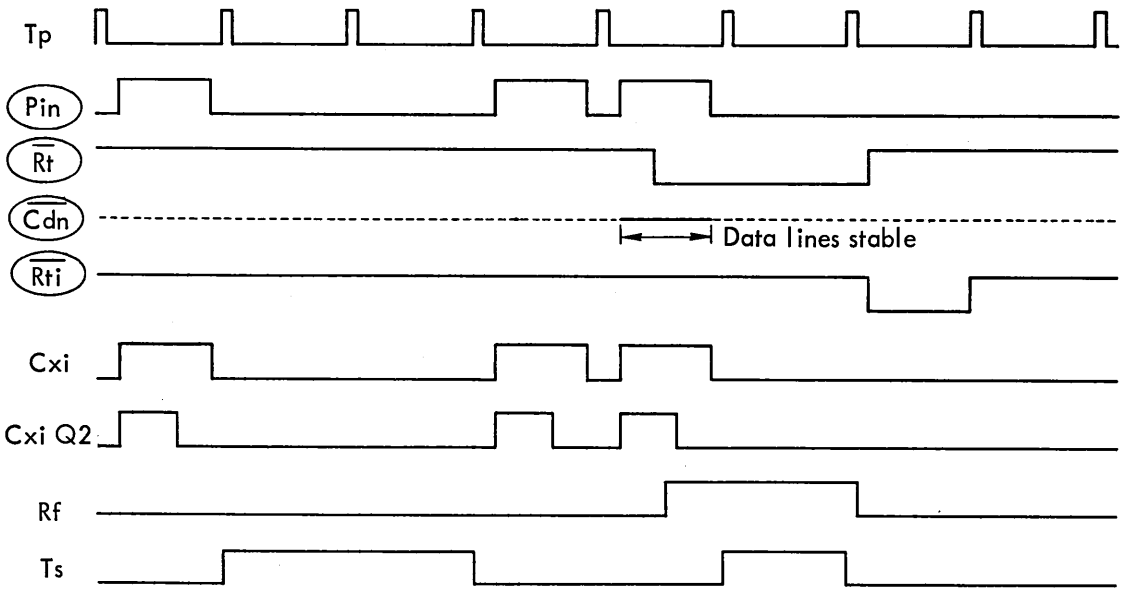

Figure 4-10. 930/9300 Timing Diagram, (Pin), (Rt), (Cdn), (Rti), Effects of Time-Share

4.33 Should a time-share operation occur during phase Ø2 of the PIN instruction, the (Pin) signal is inhibited. At the completion of the time-share operation, depending on the condition of (Rt), at least one more cycle of the (Pin) signal occurs. Should a time-share operation occur during phase Ø4, the "Pin Complete" signal is inhibited until the time-share operation(s) is/are completed.

4.34 (Pot 1), (Pot 2), (Rt), (Cn)

(See figures 4-11, 4-12, and 4-13)

4.35 The POT instruction permits direct parallel output of up to 24-bits of data to external devices from memory via the C register. The (Pot 1) signal denotes to external devices that the computer is in the process of executing a POT instruction.

$$(\text{Pot 1}) = \text{Pot 1}$$

$$\text{Pot 1} = \overline{F1}\ F2\ \overline{F3}\ \overline{02}\ 06$$

The (Pot 2) signal denotes to external devices that the contents of the C register may be strobed.

$$(\text{Pot 2}) = \text{Pot 1}\ (T5 - T1)\ \overline{Tsr}$$

The (Pot 1) signal stays true and the (Pot 2) signal repeats as long as the computer is locked in phase Ø2.

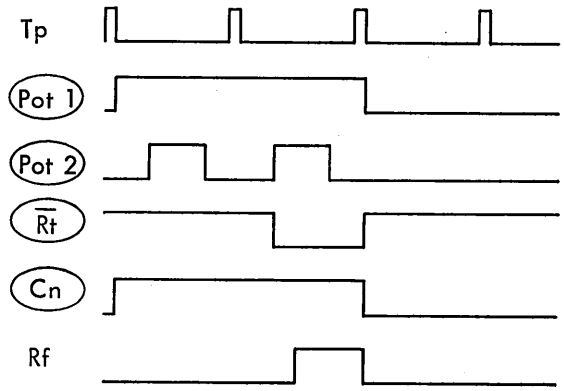

Figure 4-11. 930/9300 Timing Diagram, (Pot 1), (Pot 2), (Rt), (Cn)

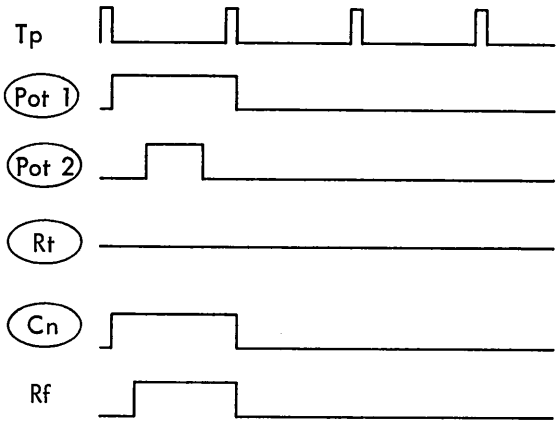

Figure 4-12. 930/9300 Timing Diagram, (Pot 1), (Pot 2), (Rt), (Cn), (Rt) Initially False

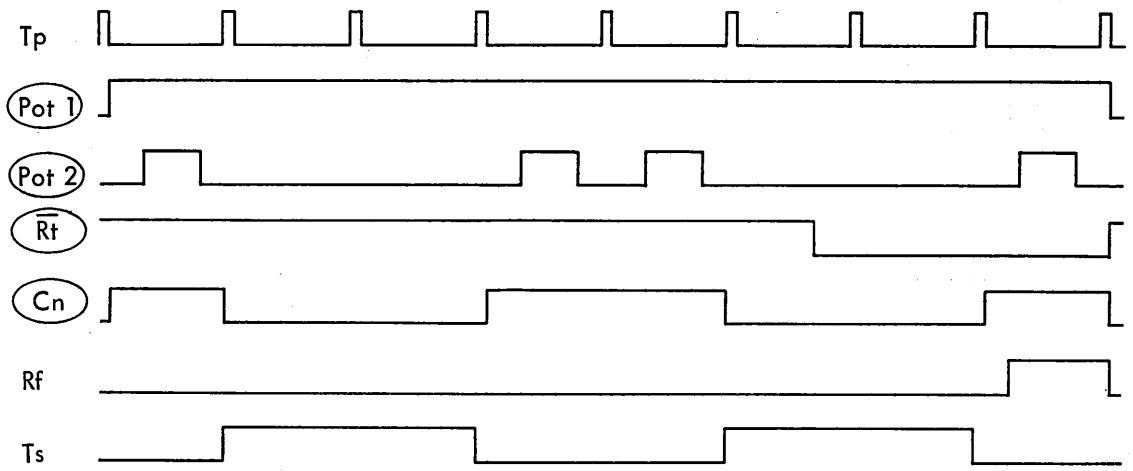

Figure 4-13. 930/9300 Timing Diagram, (Pot 1) , (Pot 2) , (Rt), (Cn) Effects of Time-Share

When the Ready signal, (Rt), from the external device goes false (low), the POT instruction proceeds to phase Ø6. (Pot 1) and (Pot 2) are then inhibited.

$$sRf = 06\ F2\ \overline{F3}\ Q2\ Rt$$

$$Rt = (Rt)$$

$$sF1 = \overline{F1}\ \overline{F3}\ \overline{01}\ 03\ \overline{04}\ \overline{Ia}\ Tp\ Rf$$

If (Rt) is always held false during the POT instruction, the POT instruction remains in phase Ø2 for only one cycle.

4.36 Should a time-share operation occur during the phase Ø2, the (Pot 1) signal remains true but (Pot 2) is inhibited. At the completion of the time-share operation, depending on the condition of (Rt), at least one more cycle of (Pot 1) and (Pot 2) occurs. It is necessary that (Rt) be held at ground until the computer acknowledges receipt of the Ready signal by making (Pot 1) go false.

4.37 (Skss) , (Ssc) (See figure 4-14)

4.38 On instructions for external system devices, an Sks strobe pulse, (Skss) , is provided from the TMCC.

$$(Skss) = Skss$$

$$Skss = Ø5\ 01\ \overline{04}\ \overline{Ts}\ (\overline{A00}\ (Q3 + Q5) + \overline{C9})$$

$$Q3 + Q5 = T6 - Tr$$

The SKS instruction remains in phase Ø5 for two cycles to permit the C register outputs, (Cn), to attain a stable configuration at the external system device. The signal (Skss) is generated during the second cycle if C9 is true. (Skss) is true for approximately two cycles if $\overline{C9}$ is true. The response from external system devices, (Ssc), (false for a skip condition) is received by the TMCC and is sent to the computer as Skrz. If a skip is to occur, the Sk flip-flop is set at Tr time during the second cycle of phase Ø5.

$$sSk = Ø5\ 01\ \overline{04}\ \overline{A00}\ Tr\ Sks + \ldots$$

$$Sks = Skrz + \ldots$$

If a time-share operation occurs during the SKS instruction, phase Ø5 is repeated for two cycles, thereby permitting the C register outputs, (Cn), to attain a stable configuration prior to the generation of the (Skss) probe pulse.

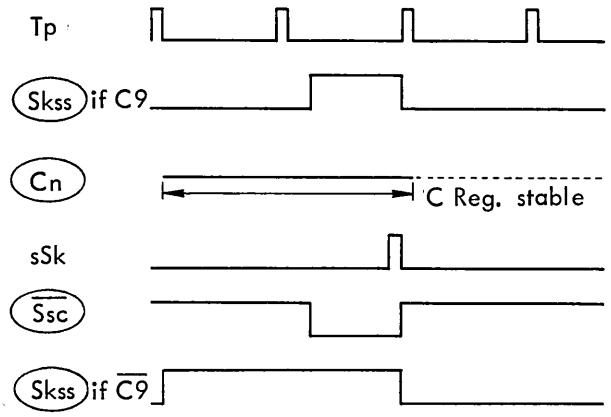

Figure 4-14. 930/9300 Timing Diagram, (Skss) , (Cn), (Ssc)

4.39 If $\overline{C9}$ is true, the (Skss) signal may occur for only one cycle if a time-share operation occurs during the SKS instruction. At the completion of the time-share, however, a two cycle (Skss) signal occurs. If C9 is true and time-share operation occurs, the (Skss) signal occurs only once, during the last of the two phase Ø5 cycles.

4.40 TEST PROGRAMS

4.41 Proper operation of the TMCC can be checked by performance of the applicable test program. Operation in the compatible mode of the TMCC can be checked by performing the test program for the input/output device connected to the TMCC. The sample test programs given in tables 4-1 and 4-2 may be performed. Test programs for the extended modes are given in the following paragraphs.

4.42 EXTENDED MODE I/O TEST PROGRAM FOR 925/930 COMPUTERS

4.43 This program tests as many of the extended I/O operations as possible with paper tape. Any 925/930 computer with a typewriter attached to the W channel and a paper-tape punch and reader on any interlaced communication channel may be utilized. The W channel need not be interlaced for the typewriter.

4.44 The program occupies 838_{10} locations from 0177 to 1714 octal. It is supplied on paper tape with a self-loading bootstrap. To load, insert tape in tape reader and perform fill procedure.

4.45 Fill

4.46 The fill procedure is as follows:

a. Set up selected input device with the input program. Initial portion of the program contains the "bootstrap" program.

b. Set RUN-IDLE-STEP switch to the IDLE position.

c. Press START switch.

d. Press PAPER TAPE FILL switch. This causes a WIM 2 (03200002) instruction to be inserted into the instruction register and loads the Index Register with 77777771. The FILL switch also prepares the channel to operate in the forward, binary, four characters per word mode.

4.47 Operation

4.48 To select the reader and punch units to be used enter:

"CU" P to select punch

"CU" R to select reader

The letter C is the channel number and may be any digit 0-7, and the letter U is the unit, either one or two. The reader and punch need not be on the same channel.

4.49 The test is started by entering the letter "S". Control of the test operation is then a function of the Breakpoint Switches. Table 4-3 summarizes the switch functions.

Table 4-3. 925/930 Computers Breakpoint Switch Functions

Breakpoint Switch	Reset	Set
1	Run in the normal mode as determined by the other switches	Stop and return to keyboard control at the end of the current pass (punch or read)
2	Continue to run test selected by switch 3	Cycle test runs from punch to read to punch and so on
3*	Selects punch mode	Selects read mode
4	Stop and type diagnostic messages whenever an error occurs	Do not stop and type on errors but continue to run.

*Used when switch 2 is reset or when starting test

4.50 When running cyclic tests from puch to read, the tape from the punch should be inserted into the reader.

4.51 Punching

4.52 The program punches four blocks of 64 characters each in one pass. The characters form a counting sequence from 00 to 77$_8$. The first block is started with leader and output with an IOSP. All punching is done in the one character per word mode. When the word count reaches zero, an IOSD is loaded to punch a second block of 64 characters. No leader is punched between the first and second blocks. This results in one physical block 128 characters long. Starting with leader, two additional blocks of 64 characters are then punched with an IOSD.

4.53 At the conclusion of each output operation, the channel address register is stored and compared with the expected value. If they do not agree, the program types the expected and actual values.

4.54 The program tests the channel during the output operation to see if the channel should erroneously disconnect before the word count reaches zero.

4.55 Reading

4.56 Each of the four blocks is read with a different set of commands and counts so as to test as many operations as possible. After reading a block, a general subroutine checks for input parity errors, channel end address for agreement with the expected address, and the data read character by character. Error messages with block numbers are typed in the event of any one of these tests failing. If a test fails, reference should then be made to the test program flow diagram and troubleshooting information in Section 5 of this manual. The handling of each block is as follows:

a. Block 1. The first block is one-half of a 128 character physical block. Reading one character per word, an IOSD with a count of 64 is used to read this block. The program checks to see if the count reaches zero and the channel becomes inactive at the same time.

b. Block 2. This is the second half of the first physical block and is read with an IOSP with a count of 65. The read should terminate because of the end of record. The program checks to see that the word count does not reach zero and the channel remains active after the CIT (inter-record test) instruction skips. The tape is finally stopped with a disconnect before the data is checked.

c. Block 3. Block 3 is a 64-character physical block. It is read with two channel commands. The first is an IOSP with a count of 32. If the count goes to zero before the channel disconnects, an IORP with a count of 33 is loaded. This should cause the inter-record indicator to be turned on at the end of the record. The count should not reach zero and the channel should remain active. The tape is again stopped with a disconnect before the data is checked.

d. Block 4. This is the third physical block of 64-characters and is read with an IORD with a count of 56. The program waits for the channel to be inactive then checks to see if the channel ignored the last eight characters. If the tape was erroneously stopped after the 56th character it will show up as a failure on the first block of the next read pass.

4.57 Test Program

4.58 Table 4-4 gives the test program for the 925/930 computers I/O extended mode.

4.59 EXTENDED MODE I/O TEST PROGRAM FOR 9300 COMPUTER

4.60 This program tests as many of the extended I/O operations as possible with paper tape. Any 9300 computer with a typewriter attached to the W channel and a paper-tape punch and reader on any interlaced communication channel may be utilized. The W channel need not be interlaced for the typewriter.

4.61 The program occupies 838$_{10}$ locations from 0177 to 1714$_8$. It is supplied on paper tape with a self-loading bootstrap. To load, insert tape in tape reader and perform fill procedure.

4.62 Fill

4.63 The fill procedure is as follows:

a. Press POWER switch on. When power is on, the switch is lighted.

b. Press IDLE switch.

c. With computer in IDLE, press RESET switch. This clears the D register and the program counter.

d. Press RUN switch. The computer now executes the instruction in the D register (which is a HALT instruction). The program counter advances to 00001.

e. Press PAPER TAPE LOAD switch. This switch causes an AIM 2 (0 32 00002) instruction to be inserted into the D register and clears the HALT instruction. Index 1 is loaded with 001 77771. The LOAD switch also prepares the channel to operate in the forward, binary, four character per word mode.

Table 4-4. 925/930 Computers, Extended Mode I/O Test Program (Sheet 1 of 20)

```
80001642    1 TYPE   EQU     930                 MACHINE DEFINITION: 930/925
            2 *
            3 *
            4 *  EXTENDED MODE I/O TEST PROGRAM. (925/930/9300 ALL CHANNELS)
            5 *
            6 *  A.W. ENGLAND, SDS
            7 *
            8 *
            9 *      THIS PROGRAM USES THE PAPER TAPE READER AND PUNCH TO CHECK THE
           10 *  OPERATION OF THE I/O CHANNELS IN THE EXTENDED INTERLACE MODE OF
           11 *  OPERATION.  THE READER AND PUNCH MAY BE CONNECTED TO ANY INTERLACED
           12 *  TMCC OR DACC.  THEY NEED NOT BE ATTACHED TO THE SAME CHANNEL.  THE
           13 *  PROGRAM ADDRESSES THE KEYBOARD FOR INFORMATION ABOUT UNIT AND CHANNEL
           14 *  SELECTION.
           15 *
           16 *      TO SELECT PUNCH TYPE:  'CU'P
           17 *
           18 *      TO SELECT READER TYPE: 'CU'R
           19 *
           20 *      WHERE 'C' REPRESENTS CHANNEL NO. AND MAY HAVE THE VALUES 0-7;
           21 *  AND 'U' REPRESENTS UNIT NO. AND MAY HAVE THE VALUE 1-2.  THE LETTER
           22 *  P OR R CAUSE THE SELECTION TO BE MADE WITH THE TWO PREVIOUS DIGITS.
           23 *  SPACES SHOULD NOT BE TYPED BETWEEN DIGITS OR CONTROL CHARACTER.
           24 *
           25 *      TO START THE TEST TYPE:  S
           26        PAGE
           27 *
           28 *
           29 *      BREAKPOINTS OR SENSE SWITCHES CONTROL THE RUNNING OF THE PROGRAM:
           30 *
           31 *    SWITCH          RESET                          SET
           32 *    ------          -----                          -----
           33 *
           34 *      BP 1    RUN IN THE NORMAL MODE    STOP AT THE END OF THE CURRENT
           35 *      SW 1    AS DETERMINED BY THE      PASS AND RETURN TO KEY BOARD
           36 *              OTHER SWITCHES.           CONTROL
           37 *
           38 *
           39 *      BP 2    CONTINUE TO RUN THE       CYCLE TEST RUNS FROM READ TO
           40 *      SW 2    TEST MODE SELECTED BY     PUNCH TO READ, ETC.
           41 *              SWITCH 3.
           42 *
           43 *
           44 *      BP 3    SELECTS PUNCH MODE        SELECTS READ MODE.
           45 *      SW 3    (USED WHEN SWITCH 2 IS RESET OR WHEN STARTING THE TEST)
           46 *
           47 *
           48 *      BP 4    STOP AND TYPE DIAGNOSTIC DO NOT STOP OR TYPE ON ERRORS.
```

Table 4-4. 925/930 Computers, Extended Mode I/O Test Program (Sheet 2 of 20)

```
49 *       SW 4    MESSAGES WHENEVER AN      CONTINUE RUNNING REGARDLESS.
50 *               ERROR OCCURS.
51 *
52 *
53 * NOTE: TO RUN CONTINOUS FROM READ TO PUNCH THE OUTPUT OF THE PUNCH
54 *       SHOULD BE FED INTO THE READER.  A LOOP SHOULD BE USED TO RUN
55 *       CONTINOUS ON THE READER.
56         PAGE
57 *
58 *  THE FOLLOWING SECTION OF CODE DEFINES EITHER A 925/930 INSTRUCTION
59 *  SET OR A 9300 INSTRUCTION SET. THIS IS DONE ON THE BASIS OF THE
60 *  MACHINE TYPE STATEMENT AT THE BEGINNING OF THE DECK.
61 *
62 *
63 *
64 *
65         PROC
66 DF9300  NAME
67 $INST   FORM    3,6,15
68 P       PROC    1                       DEFINE INDEX OP'S TO IMPLY X1.
69 $LDX    NAME    017
70 $STX    NAME    077
71 $BRX    NAME    057
72         INST    (P(*1)*/2)++1,P(0),P(1)
73         END
74 P       PROC    1
75 $XAB    NAME    037733                  DEFINE COMPATIBLE REGISTER OP'S
76 $ABC    NAME    037731
77 $BAC    NAME    037713
78 $CLR    NAME    037711
79         INST    0,040,P(0)
80         END
81 P       PROC    1
82 $RSH    NAME    000                     DEFINE COMPATIBLE SHIFTS
83 $RCY    NAME    002
84 $LSH    NAME    004
85 $LCY    NAME    006
86 $NOD    NAME    044
87 $SHFT   FORM    3,6,6,9
88         SHFT    P(2),060,P(0),P(1)**0777
89         END
90 P       PROC    1                       DEFINE MISC. COMPATIBLE OP'S.
91 $MIN    NAME    071
92 $MIB    NAME    030
93 $BIM    NAME    032
94         INST    (P(*1)*/2)++P(2),P(0),P(1)
95         END
96 *
```

Table 4-4. 925/930 Computers, Extended Mode I/O Test Program (Sheet 3 of 20)

```
 97 $X      EQU     1                       DEFINE INDEX TAG 'X' FOR X1
 98 *                                       EOD CONSTANT
 99         AORG    0177
100 $EODC   DATA    04000000                EOD CONSTANT
101 *
102 $SWTFRM    FORM  3,6,3,12
103 Q       PROC    1
104 $BPT    NAME    040000
105 $OVT    NAME    014040
106 $ROV    NAME    04000
107 $SOV    NAME    00040
108         SWTFRM  0,022,Q(0)*/(-12)**7,Q(0)**07777++(Q(1)>0)*/(6-Q(1))
109         END
110         END
111 *
112         PROC
113 DF930   NAME
114 *
115 * IF NOT A 9300 THEN DO THE FOLLOWING OPERATIONS
116 *
117 P       PROC    1                       DEFINE I/O INSTRUCTIONS
118 $MIB    NAME    012
119 $BIM    NAME    032
120 INST    FORM    3,6,1,14
121         INST    P(2),P(0),P(*1),P(1)
122         END
123 *
124 $X      EQU     2                       DEFINE INDEX TAG 'X' FOR 2 ON 930
125 *
126 *
127         AORG    0177
128 $EODC   DATA    0400000                 EOD CONSTANT
129 *
130 *
131 N       PROC    1                       SET OVERFLOW
132 $SOV    NAME
133         BRR     $,4
134         END
135 *
136 M       PROC    1                       BRANCH AND CLEAR INTERRUPT
137 $BRC    NAME
138         DO      M(*1),1,2
139         BRU     M(1)
140         BRU     *$+1
141         PZE     M(1)
142         END
143 P       PROC    1
144 $DSC    NAME    0
```

Table 4-4. 925/930 Computers, Extended Mode I/O Test Program (Sheet 4 of 20)

```
                                  145 $ALC    NAME    050000
                                  146 $ASC    NAME    012000
                                  147 $TSP    NAME    014000
                                  148 I       FORM    3,6,15
                                  149         I       P(1)**2,(P(1)**4)*/3++2,P(0)++(P(1)**1)*/6
                                  150         END
                                  151 P       PROC    1
                                  152 $CAT    NAME    014000
                                  153 $CET    NAME    011000
                                  154 $CIT    NAME    010400
                                  155 $CZT    NAME    012000
                                  156 I       FORM    3,6,15
                                  157         I       P(1)**2,040,P(0)++(P(1)**4)*/12++(P(1)**1)*/6
                                  158         END
                                  159         END
                                  160         DO      TYPE=9300
                                  161         DF9300
                                  162         DO      TYPE<9300
00177  00400000                   163         DF930
                                  164         PAGE
                                  165 *
                                  166 *  THE START OF THE PROGRAM
                                  167 *
00200                             168         ABRG    0200
00200  0 76 0 00203               169 BEGIN   LDA     BRUGO           INITIALIZE RECOVERY LOCATIONS
00201  0 35 0 00001               170         STA     1
00202  0 35 0 00032               171         STA     032
00203  0 01 0 00204               172 BRUGO   BRU     KYBD
00204  0 23 0 01241               173 KYBD    EXU     RDIS
00205  0 23 0 01231               174         EXU     PDIS
00206  0 46 30003                 175 G02     CLR
00207  0 35 0 01444               176         STA     T1
00210  0 02 0 02001               177         RKB     0,1,1
00211  0 32 0 01445               178 G01     BIM     T1+1            READ CHARACTER
00212  0 76 0 01445               179         LDA     T1+1
00213  0 75 0 01636               180         LDB     =077
00214  0 70 0 01637               181         SKM     =' P'           CHECK FOR CONTROL CHAR.
00215  0 01 0 00217               182         BRU     $+2
00216  0 01 0 00233               183         BRU     P0
00217  0 70 0 01640               184         SKM     =' R'
00220  0 01 0 00222               185         BRU     $+2
00221  0 01 0 00256               186         BRU     R0
00222  0 70 0 01641               187         SKM     =' S'
00223  0 01 0 00225               188         BRU     $+2
00224  0 43 0 00317               189         BRM     S0
00225  0 72 0 01642               190         SKA     =070            CHECK FOR DIGIT
00226  0 01 0 00206               191         BRU     G02              IF NOT CONTROL OR DIGIT CLEAR
00227  0 75 0 01444               192         LDB     T1
```

Table 4-4. 925/930 Computers, Extended Mode I/O Test Program (Sheet 5 of 20)

```
00230  0 36 0 01446          193          STB     T1+2                SAVE CHANNEL NUMBER IN T1+2
00231  0 35 0 01444          194          STA     T1                  SAVE UNIT NUMBER IN T1
00232  0 01 0 00211          195          BRU     G01
                             196          PAGE
                             197 *
                             198 *   PUNCH CHANNEL SET UP ROUTINE
                             199 *
00233  0 43 0 00323          200 PO       BRM     MAKECH              GET CHANNEL NO. BUILT. SAVED IN T1+2
00234  0 71 0 01643          201          LDX     =-4**0177777        UPDATE EOM/EOD'S
00235  2 76 0 01234          202          LDA     PALC+1,X
00236  0 14 0 01644          203          ETR     =050277677
00237  0 16 0 01446          204          MRG     T1+2                INSERT CHANNEL DESIGNATION
00240  0 35 1 00235          205          STA     *$-3
00241  0 41 0 00235          206          BRX     $-4
00242  0 71 0 01645          207          LDX     =-3**0177777        UPDATE SKS'S
00243  2 76 0 01227          208          LDA     PCET+1,X
00244  0 14 0 01646          209          ETR     =057737677
00245  0 16 0 01447          210          MRG     T1+3
00246  0 35 1 00243          211          STA     *$-3
00247  0 41 0 00243          212          BRX     $-4
00250  0 71 0 01643          213          LDX     =-4**0177777        UPDATE CHANNEL COMMANDS
00251  2 76 0 01212          214          LDA     PIOSD+2,X
00252  0 14 0 01647          215          ETR     =050277777
00253  0 16 0 01450          216          MRG     T1+4
00254  0 35 1 00251          217          STA     *$-3
00255  0 41 0 00256          218          BRX     $+1
00256  0 41 0 00251          219          BRX     $-5
00257  0 76 0 01230          220          LDA     PTL                 UPDATE UNIT NO.
00260  0 14 0 01650          221          ETR     =-2
00261  0 16 0 01444          222          MRG     T1
00262  0 35 0 01230          223          STA     PTL
00263  0 16 0 01651          224          MRG     =02000              MAKE NO LEADER EOM
00264  0 35 0 01227          225          STA     PPT
00265  0 01 0 00204          226          BRU     KYBD
                             227 *
                             228 *   READER CHANNEL SET UP ROUTINE
                             229 *
                             230 *
00266  0 43 0 00323          231 RO       BRM     MAKECH              GET CHANNEL NO BUILT
00267  0 71 0 01643          232          LDX     =-4**0177777        UPDATE EOM/EOD'S
00270  2 76 0 01244          233          LDA     RALC+1,X
00271  0 14 0 01644          234          ETR     =050277677
00272  0 16 0 01446          235          MRG     T1+2
00273  0 35 1 00270          236          STA     *$-3
00274  0 41 0 00270          237          BRX     $-4
00275  0 71 0 01643          238          LDX     =-4**0177777        BUILD SKS'S
00276  2 76 0 01240          239          LDA     RCIT+1,X
00277  0 14 0 01646          240          ETR     =057737677
```

Table 4-4. 925/930 Computers, Extended Mode I/O Test Program (Sheet 6 of 20)

```
00300  0 16 0 01447      241          MRG     T1+3
00301  0 35 1 00276      242          STA     *$-3
00302  0 41 0 00276      243          BRX     $-4
00303  0 71 0 01652      244          LDX     =-10**0177777        BUILD CHANNEL COMMAND E0M/E0D'S
00304  2 76 0 01224      245          LDA     RI0RD+2,X
00305  0 14 0 01653      246          ETR     =070277777
00306  0 16 0 01450      247          MRG     T1+4
00307  0 35 1 00304      248          STA     *$-3
00310  0 41 0 00311      249          BRX     $+1
00311  0 41 0 00304      250          BRX     $-5
00312  0 76 0 01240      251          LDA     RPT                  BUILD RPT WITH UNIT N0.
00313  0 14 0 01650      252          ETR     =-2
00314  0 16 0 01444      253          MRG     T1
00315  0 35 0 01240      254          STA     RPT
00316  0 01 0 00204      255          BRU     KYBD
                         256 *
                         257 *
                         258 *    START TEST RUNNING
                         259 *
00317  0 02 00000        260 S0       DSC     0                    DISCONNECT
00320  0 40 20100        261          BPT     3                    START READ OR PUNCH?
00321  0 01 0 00640      262          BRU     IN                   READ
00322  0 01 0 00356      263          BRU     0UT                  PUNCH
                         264          PAGE
                         265 *
                         266 *    BUILD CHANNEL N0. SUBROUTINE
                         267 *
00323  0 00 0 00000      268 MAKECH   PZE
00324  0 46 30003        269          CLR
00325  0 76 0 01446      270          LDA     T1+2                 GET CH. N0.
00326  0 72 0 01654      271          SKA     =4                   E0D REQUIRED
00327  0 75 0 00177      272          LDB     E0DC                 YES
00330  0 36 0 01450      273          STB     T1+4                 N0, SAVE E0D BIT.
00331  0 14 0 01655      274          ETR     =3
00332  0 35 0 01446      275          STA     T1+2
00333  0 71 0 01446      276          LDX     T1+2
00334  0 76 0 01450      277          LDA     T1+4
00335  2 16 0 00352      278          MRG     MAKETB,X             BUILD E0M/E0D SELECTION
00336  0 35 0 01446      279          STA     T1+2                 SAVE E0M
00337  0 46 10012        280          BAC                          BUILD SKS SELECTION
00340  0 72 0 00177      281          SKA     E0DC
00341  0 75 0 01656      282          LDB     =040000
00342  0 46 00014        283          XAB
00343  2 16 0 00352      284          MRG     MAKETB,X
00344  0 35 0 01447      285          STA     T1+3                 SAVE SKS
00345  0 76 0 01444      286          LDA     T1                   BUILD UNIT N0. BIT
00346  0 14 0 01657      287          ETR     =1
00347  0 17 0 01657      288          E0R     =1
```

Table 4-4. 925/930 Computers, Extended Mode I/O Test Program (Sheet 7 of 20)

```
00350  0 35 0 01444        289          STA     T1                    SAVE UNIT NO. BIT
00351  0 51 0 00323        290          BRR     MAKECH                EXIT
                           291 *
00352  00000000            292 MAKETB   DATA    0,0100,020000000,020000100
00353  00000100
00354  20000000
00355  20000100
                           293          PAGE
                           294 *
                           295 *  PAPER TAPE PUNCH OUTPUT SECTION.
                           296 *
00356  0 71 0 01650        297 OUT      LDX     =-64**0177777         SET UP OUTPUT IMAGE WITH 64 WORDS
00357  0 46 30003          298          CLR
00360  2 35 0 01344        299          STA     IMAGE+64,X
00361  0 55 0 01651        300          ADD     =01000000
00362  0 41 0 00350        301          BRX     $-2
00363  0 23 0 01230        302 OUT4     EXU     PTL                    START PUNCH WITH LEADER
00364  0 23 0 01233        303          EXU     PALC                   ALERT CHANNEL
00365  0 23 0 01206        304          LCH     PIOSP                  LOAD IOSP IMAGE,64
00366  0 13 0 01207
00367  0 71 0 01643        305          LDX     =-4**0177777          SET UP FOR SUBROUTINE TO TYPE:
00370  0 75 0 01652        306          LDB     =ERMSG1                IOSP, OUTPUT
00371  0 76 0 00431        307          LDA     PCATC
00372  0 43 0 00610        308          BRM     WCZ                    WAIT FOR CHANNEL COUNT = ZERO
00373  0 23 0 01226        309          EXU     PCET                   ERROR ON OUTPUT
00374  0 40 20040          310          BPT     4                      YES, CHECK BP4 FOR NO STOP
00375  0 01 0 00416        311          BRU     OUT4A                  NO, NO STOP ON ERROR
00376  0 23 0 01231        312 OUT2     EXU     PDIS                   ERROR, DISCONNECT CHANNEL
00377  0 02 0 02641        313          TYP     0,1,4                  TYPE GENERAL ERROR MESSAGE
00400  0 12 0 01653        314          MIB     =052121225             I  E
00401  0 12 0 01654        315          MIB     =051514651             RROR
00402  0 12 0 01655        316          MIB     =012246451              OUR
00403  0 12 0 01656        317          MIB     =031452712             ING
00404  0 46 00014          318          XAB                            TYPE SPECIFIC ERROR MESSAGE
00405  0 16 0 01635        319          MRG     MIBX
00406  0 35 0 00407        320          STA     $+1
00407  0 12 0 00000        321          MIB     00                     TO BE REPLACED AT RUN TIME
00410  0 61 0 00407        322          MIN     $-1
00411  0 41 0 00407        323          BRX     $-2
00412  0 02 14000          324 GOTOP    TOP     0
00413  0 40 14000          325          CAT     0
00414  0 01 0 00413        326          BRU     $-1
00415  0 01 0 00204        327          BRU     KYBD
                           328 *
00416  0 43 0 00476        329 OUT4A    BRM     OUTPIN                 GO PIN AND CHECK CHANNEL ADDRESS
00417  0 23 0 01224        330          EXU     PCAT                    IF CHANNEL INACTIVE READDRESS PUNCH
00420  0 01 0 00422        331          BRU     $+2
00421  0 23 0 01227        332          EXU     PPT
```

Table 4-4. 925/930 Computers, Extended Mode I/O Test Program (Sheet 8 of 20)

```
00422  0 23 0 01233          333          EXU     PALC
00423  0 23 0 01210          334          LCH     PIOSD          LOAD CH. IOSD IMAGE,64
00424  0 13 0 01211
00425  0 71 0 01643          335 OUT1     LDX     =-4**0177777   SET UP ERROR MESSAGE:
00426  0 75 0 01657          336          LDB     =ERMSG2         IOSD, OUTPUT
00427  0 76 0 00431          337          LDA     PCATC
00430  0 43 0 00610          338          BRM     WCZ            WAIT FOR COUNT EQUAL ZERO
00431  0 23 0 01224          339 PCATC    EXU     PCAT           CHAN. ACTIVE?
00432  0 01 0 00431          340          BRU     $-1            YES
00433  0 23 0 01226          341          EXU     PCET           NO, ERROR?
00434  0 40 20040            342          BPT     4              YES, IS STOP ALLOWED?
00435  0 01 0 00437          343          BRU     $+2            NO ERROR OR NO STOP
00436  0 01 0 00376          344          BRU     OUT2           ERROR STOP ALLOWED
00437  0 43 0 00476          345          BRM     OUTPIN         GO PIN AND CHECK CHANNEL ADDRESS
00440  0 46 30003            346          CLR
00441  0 35 0 01452          347          STA     PRF            R(PUNCH REPEAT)
00442  0 23 0 01230          348 OUT1A    EXU     PTL
00443  0 23 0 01233          349          EXU     PALC
00444  0 23 0 01210          350          LCH     PIOSD          LOAD IOSD  IMAGE,64
00445  0 13 0 01211
00446  0 71 0 01643          351          LDX     =-4**0177777   SET UP ERROR MESSAGE:
00447  0 75 0 01657          352          LDB     =ERMSG2
00450  0 76 0 00431          353          LDA     PCATC
00451  0 43 0 00610          354          BRM     WCZ
00452  0 23 0 01224          355          EXU     PCAT           CHAN. ACTIVE?
00453  0 01 0 00452          356          BRU     $-1            YES
00454  0 23 0 01226          357          EXU     PCET           NO, CHAN. ERROR
00455  0 40 20040            358          BPT     4              YES, IS ERROR STOP ALLOWED
00456  0 01 0 00460          359          BRU     $+2            NO,NO
00457  0 01 0 00376          360          BRU     OUT2           YES
00460  0 43 0 00476          361          BRM     OUTPIN         GO PIN AND CHECK CHANNEL ADDRESS
00461  0 53 0 01452          362          SKN     PRF            PUNCH REPEAT
00462  0 01 0 00464          363          BRU     $+2            RESET
00463  0 01 0 00457          364          BRU     OUT3           SET
00464  0 76 0 01670          365          LDA     =-1           S(PUNCH REPEAT)
00465  0 35 0 01452          366          STA     PRF
00466  0 01 0 00442          367          BRU     OUT1A
                             368 *
                             369 *
00467  0 40 20400            370 OUT3     BPT     1              GO OR STOR
00470  0 01 0 00234          371          BRU     KYBD           STOP
00471  0 40 20200            372          BPT     2              GO, CYCLE?
00472  0 01 0 00640          373          BRU     IN             YES
00473  0 40 20100            374          BPT     3              ONE ONLY
00474  0 01 0 00640          375          BRU     IN
00475  0 01 0 00356          376          BRU     OUT
                             377 *
                             378 *  SUBROUTINE TO CHECK CHANNEL ADDRESS
```

Table 4-4. 925/930 Computers, Extended Mode I/O Test Program (Sheet 9 of 20)

```
                        379 *
00476  0 00 0 00000     380 OUTPIN PZE     0
00477  0 23 0 01232     381        EXU     PASC              ALERT TO STORE PUNCH CHANNEL
00500  0 33 0 01444     382        PIN     T1                STORE ADDRESS
00501  0 76 0 01444     383        LDA     T1
00502  0 17 0 01671     384        EOR     =IMAGE+64         COMPARE WITH EXPECTED
00503  0 72 0 01670     385        SKA     =-1
00504  0 40 20040       386        BPT     4                 NOT EQUAL
00505  0 51 0 00476     387        BRR     OUTPIN            EQUAL OR ERROR STOP NOT PERMITTED
00506  0 37 0 01445     388        STX     T1+1              SAVE LENGTH OF ERROR MESSAGE
00507  0 46 00014       389        XAB                       SET UP ERROR OUTPUTTER
00510  0 16 0 01635     390        MRG     MIBX
00511  0 35 0 00530     391        STA     OTPIN1
00512  0 76 0 01671     392        LDA     =IMAGE+64         GENERATE EXPECTED PIN WORD IN BCD
00513  0 43 0 00537     393        BRM     MKOCT
00514  0 35 0 00577     394        STA     OTPNM1            SAVE EXPECTED
00515  0 36 0 00600     395        STB     OTPNM1+1
00516  0 76 0 01444     396        LDA     T1                GENERATE ACTUAL PIN WORD IN BCD
00517  0 43 0 00537     397        BRM     MKOCT
00520  0 35 0 00605     398        STA     OTPNM2
00521  0 36 0 00606     399        STB     OTPNM2+1
00522  0 23 0 01231     400        EXU     PDIS              DISCONNECT PUNCH CHANNEL
00523  0 71 0 01672     401        LDX     =-15**0177777
00524  0 02 0 02641     402        TYP     0,1,4
00525  2 12 0 00574     403        MIB     OTPNM+15,X        OUTPUT MESSAGE
00526  0 41 0 00525     404        BRX     $-1
00527  0 71 0 01445     405        LDX     T1+1              OUTPUT SPECIAL MESSAGE
00530  0 12 0 00000     406 OTPIN1 MIB     00
00531  0 61 0 00530     407        MIN     $-1
00532  0 41 0 00530     408        BRX     $-2
00533  0 71 0 01673     409 OTPIN2 LDX     =-12**0177777     OUTPUT RECEIVED AND EXPECTED MESSAGE
00534  2 12 0 00610     410        MIB     OTPNM2+3,X
00535  0 41 0 00534     411        BRX     $-1
00536  0 01 0 00412     412        BRU     GOTOP
                        413 *
                        414 *
                        415 *  SUBROUTINE TO MAKE ONE WORD INTO 8 BCD OCTAL DIGITS
                        416 *
00537  0 00 0 00000     417 MKOCT  PZE     0
00540  0 71 0 01674     418        LDX     =-8**0177777
00541  0 46 20005       419        ABC                       0 TO WORD TO B
00542  0 6700 003       420        LSH     3                 SHIFT OUT OCTAL DIGIT
00543  2 35 0 01456     421        STA     T1+10,X           SAVE BCD CHARACTER
00544  0 76 0 01675     422        LDA     =0                CLEAR A
00545  0 41 0 00542     423        BRX     $-3
00546  0 46 30003       424        CLR
00547  0 71 0 01674     425        LDX     =-8**0177777      REASSEMBLY BCD CHARACTERS INTO A + B.
00550  0 6720 006       426        LCY     6
```

Table 4-4. 925/930 Computers, Extended Mode I/O Test Program (Sheet 10 of 20)

```
00551  2 16 0 01456          427          MRG     T1+10,X
00552  0 41 0 00550          428          BRX     $-2
00553  0 46 00014            429          XAB
00554  0 51 0 00537          430          BRR     MK0CT                EXIT
                             431 *
                             432 *
                             433 *  ERR0R MESSAGES F0R CHANNEL ADDRESS TEST SUBR0UTINE
                             434 *
00555  52254524              435 0TPNM    BCD     52,!END ADDRESS FR0M CHANNEL DID N0T AGREE WITH EXPECTE
00556  12212424
00557  51256262
00560  12265146
00561  44122330
00562  21454525
00563  43122431
00564  24124546
00565  63122127
00566  51252512
00567  66316330
00570  12256747
00571  25236325
00572  24122126              436          BCD     8,D AFTER
00573  63255112
00574  25674725              437          BCD     12,EXPECTED
00575  23632524
00576  12121212
00577  00000000              438 0TPNM1   DATA    0,0
00600  00000000
00601  73121252              439          BCD     16,,  !RECEIVED
00602  51252325
00603  31652524
00604  12121212
00605  00000000              440 0TPNM2   DATA    0,0
00606  00000000
00607  33125252              441          BCD     4,, !!
                             442          PAGE
                             443 *
                             444 *  WAIT F0R C0UNT EQUAL ZER0 SUBR0UTINE.
                             445 *
00610  0 00 0 00000          446 WCZ      PZE                          ENTRY
00611  0 35 0 00617          447          STA     $+6                  SAVE R/PCAT
00612  0 55 0 01657          448          ADD     =1                   MAKE A CZT
00613  0 35 0 00614          449          STA     $+1                  SAVE R/PCZT
00614  0 40 12000            450          CZT     00                   C = 02?
00615  0 01 0 00617          451          BRU     $+2                  N0
00616  0 51 0 00610          452          BRR     WCZ                  YES
00617  0 40 14000            453          CAT     00                   CHANNEL ACTIVE?
00620  0 01 0 00614          454          BRU     $-4                  YES
```

Table 4-4. 925/930 Computers, Extended Mode I/O Test Program (Sheet 11 of 20)

```
00621  0 40 20040          455          BPT     4                    NO, INHIBIT ERRORS
00622  0 51 0 00610        456          BRR     WCZ                  YES
00623  0 37 0 01444        457          STX     T1                   NO, PRINT ERROR MESSAGE
00624  0 46 00014          458          XAB
00625  0 16 0 01635        459          MRG     MIBX
00626  0 35 0 00634        460          STA     $+6
00627  0 71 0 01676        461          LDX     =-13**0177777
00630  0 02 0 02641        462          TYP     0,1,4
00631  2 12 0 01500        463          MIB     DISMSG+13,X
00632  0 41 0 00631        464          BRX     $-1
00633  0 71 0 01444        465          LDX     T1
00634  0 12 0 00000        466          MIB     00
00635  0 61 0 00634        467          MIN     $-1
00636  0 41 0 00634        468          BRX     $-2
00637  0 01 0 00412        469          BRU     GOTOP
                           470          PAGE
                           471 *
                           472 *  INPUT SECTION
                           473 *
00640  0 43 0 01177        474 IN       BRM     STARTP               START READER
00641  0 02 20001          475          ROV
00642  0 23 0 01243        476          EXU     RALC                 ALERT
00643  0 23 0 01212        477          LCH     RIOSD                LOAD IOSD  BUFFER,64
00644  0 13 0 01213
00645  0 23 0 01235        478 INOB     EXU     RCZT                 C=0
00646  0 01 0 00657        479          BRU     INC                  NO
00647  0 23 0 01234        480 RCATC    EXU     RCAT                 YES, CHAN. ACTIVE
00650  0 40 20040          481          BPT     4                    YES, ERROR STOP PERMITTED
00651  0 01 0 00670        482          BRU     INOA                 NO, NO CONT.
00652  0 71 0 01676        483          LDX     =-13**0177777        YES
00653  0 02 0 02641        484          TYP     0,1,4
00654  2 12 0 01525        485          MIB     ERMSG4+13,X
00655  0 41 0 00654        486          BRX     $-1
00656  0 01 0 00412        487          BRU     GOTOP
                           488 *
00657  0 23 0 01234        489 INC      EXU     RCAT                 CHAN. ACTIVE STILL?
00660  0 01 0 00645        490          BRU     INOB                 YES
00661  0 23 0 01235        491          EXU     RCZT                 NO, C=0
00662  0 01 0 00654        492          BRU     $+2                  NO
00663  0 01 0 00670        493          BRU     INOA                 YES
00664  0 71 0 01645        494          LDX     =-3**0177777         SET UP ERROR MESSAGE
00665  0 75 0 01677        495          LDB     =ERMSG5
00666  0 76 0 00647        496          LDA     RCATC
00667  0 43 0 00610        497          BRM     WCZ                  GO DO DISCONNECT ERROR TEST
00670  0 76 0 01700        498 INOA     LDA     =033120152           BLOCK NO. 1
00671  0 75 0 01701        499          LDB     =BUFFER+64           END ADDRESS EXPECTED
00672  0 43 0 01055        500          BRM     CHECK                GO CHECK DATA
00673  0 43 0 01177        501 IN1      BRM     STARTP               START READER IF DATA CHECKED O.K.
```

Table 4-4. 925/930 Computers, Extended Mode I/O Test Program (Sheet 12 of 20)

```
00674  0 02 20001          502          R0V
00675  0 23 0 01243        503          EXU     RALC
00676  0 23 0 01214        504          LCH     RI0SP          LOAD I0SP BUFFER,65
00677  0 13 0 01215
00700  0 76 0 01670        505          LDA     =-1
00701  0 35 0 01451        506          STA     SPF            S(I0SP INPUT)
00702  0 23 0 01237        507 IN4      EXU     RCIT           INTERRECORD CONDITION
00703  0 01 0 00705        508          BRU     $+2            NO
00704  0 01 0 00732        509          BRU     IN2            YES
00705  0 23 0 01234        510          EXU     RCAT           CHAN. ACTIVE
00706  0 01 0 00716        511          BRU     IN1A           YES
00707  0 40 20040          512          BPT     4              NO, ERROR STOP PERMITTED
00710  0 01 0 00732        513          BRU     IN2            NO
00711  0 71 0 01672        514          LDX     =-15**0177777  YES
00712  0 02 0 02641        515          TYP     0,1,4
00713  2 12 0 01547        516          MIB     ERMSG6+15,X
00714  0 41 0 00713        517          BRX     $-1
00715  0 01 0 00412        518          BRU     GOTOP
                           519 *
00716  0 23 0 01235        520 IN1A     EXU     RCZT           C=0
00717  0 01 0 00702        521          BRU     IN4            NO
00720  0 23 0 01237        522          EXU     RCIT           YES, CHAN. INTER-RECORD
00721  0 01 0 00732        523          BRU     IN2            NO
00722  0 40 20040          524          BPT     4              YES, ERROR STOP PERMITTED
00723  0 01 0 00732        525          BRU     IN2            NO
00724  0 23 0 01241        526          EXU     RDIS           YES, STOP TAPE
00725  0 71 0 01702        527          LDX     =-17**0177777
00726  0 02 0 02641        528          TYP     0,1,4
00727  2 12 0 01570        529          MIB     ERMSG7+17,X
00730  0 41 0 00727        530          BRX     $-1
00731  0 01 0 00412        531          BRU     GOTOP
                           532 *
00732  0 23 0 01236        533 IN2      EXU     RCET           IF CHANNEL ERROR
00733  4 51 0 00733        534          SOV                    SET OVERFLOW
00734  0 23 0 01241        535          EXU     RDIS           STOP TAPE
00735  0 53 0 01451        536          SKN     SPF            I0SP INPUT FLAG
00736  0 01 0 00756        537          BRU     IN3            RESET
00737  0 76 0 01703        538          LDA     =033120252     SET, GET BLOCK NO. 2
00740  0 75 0 01444        539          LDB     BUFFER+64      END ADDRESS EXPECTED
00741  0 43 0 01055        540          BRM     CHECK          CHECK DATA INPUT
                           541 *                               IF CORRECT CONTINUE.
00742  0 43 0 01177        542          BRM     STARTP         START TAPE
00743  0 02 20001          543          R0V
00744  0 23 0 01243        544          EXU     RALC           ALERT
00745  0 23 0 01216        545          LCH     RI0SP1         LOAD I0SP BUFFER,32
00746  0 13 0 01217
00747  0 71 0 01645        546          LDX     =-3**0177777   SET UP ERROR MESSAGE
00750  0 75 0 01704        547          LDB     =ERMSG8
```

Table 4-4. 925/930 Computers, Extended Mode I/O Test Program (Sheet 13 of 20)

```
00751  0 76 0 00647          548          LDA     RCATC
00752  0 43 0 00610          549          BRM     WCZ                 GO WAIT FOR C=0
00753  0 23 0 01236          550          EXU     RCET                IF CHANNEL ERROR
00754  4 51 0 00754          551          SOV                         SET OVERFLOW
00755  0 23 0 01234          552          EXU     RCAT                IS READER STILL RUNNING
00756  0 01 0 00750          553          BRU     IN5                 YES
00757  0 23 0 01240          554          EXU     RPT                 NO. RESTART TAPE READER
00760  0 23 0 01243          555 IN5      EXU     RALC
00761  0 23 0 01220          556          LCH     RIORP               LOAD IORD BUFFER+32,33
00762  0 13 0 01221
00763  0 46 30003            557          CLR
00764  0 35 0 01451          558          STA     SPF                 R(IOSP INPUT)
00765  0 01 0 00702          559          BRU     IN4
                             560 *
00766  0 76 0 01705          561 IN3      LDA     =033120352          BLOCK NO. 3
00767  0 75 0 01701          562          LDB     =BUFFER+64          END ADDRESS EXPECTED
00770  0 43 0 01055          563          BRM     CHECK               GO CHECK DATA
00771  0 43 0 01177          564          BRM     STARTP              START TAPE
00772  0 23 0 01243          565          EXU     RALC
00773  0 23 0 01222          566          LCH     RIORD               LOAD IORD BUFFER,56
00774  0 13 0 01223
00775  0 23 0 01234          567          EXU     RCAT                CHAN. ACTIVE
00776  0 01 0 00775          568          BRU     $-1                 YES, WAIT FOR STOP
00777  0 71 0 01674          569          LDX     =-8**0177777        CHAN. INACTIVE
01000  0 76 0 01636          570          LDA     =077
01001  2 72 0 01444          571          SKA     BUFFER+64,X         CHECK FOR 0'S IN LAST 8 CHARACTERS
01002  0 01 0 01024          572          BRU     IN3A
01003  0 41 0 01001          573          BRX     $-2
01004  0 71 0 01674          574 IN3B     LDX     =-8**0177777        O.K. INSERT CORRECT 8 CHARACTERS
01005  0 76 0 01642          575          LDA     =070
01006  2 35 0 01444          576          STA     BUFFER+64,X
01007  0 55 0 01657          577          ADD     =1
01010  0 41 0 01006          578          BRX     $-2
01011  0 76 0 01706          579          LDA     =033120452          BLOCK NO. 4
01012  0 75 0 01707          580          LDB     =BUFFER+56          END ADDRESS EXPECTED
01013  0 02 20001            581          ROV
01014  0 43 0 01055          582          BRM     CHECK               GO CHECK DATA
01015  0 40 20400            583          BPT     1                   TEST STOP?
01016  0 01 0 00204          584          BRU     KYBD                YES
01017  0 40 20200            585          BPT     2                   TEST CYCLE?
01020  0 01 0 00356          586          BRU     OUT                 YES
01021  0 40 20100            587          BPT     3                   TEST ONE ONLY.
01022  0 01 0 00640          588          BRU     IN                  READ
01023  0 01 0 00356          589          BRU     OUT                 PUNCH
                             590 *
01024  0 40 20040            591 IN3A     BPT     4                   ERROR STOP PERMITTED
01025  0 01 0 01004          592          BRU     IN3B                NO
01026  0 71 0 01674          593          LDX     =-8**0177777        FORMAT LAST EIGHT CHARACTERS FOR TYPE
```

Table 4-4. 925/930 Computers, Extended Mode I/O Test Program (Sheet 14 of 20)

```
01027  0 46 30003          594         CLR
01030  2 76 0 01444        595 IN3D    LDA     BUFFER+64,X
01031  0 6700 003          596         LSH     3
01032  2 16 0 01444        597         MRG     BUFFER+64,X
01033  0 14 0 01710        598         ETR     =0707
01034  0 16 0 01711        599         MRG     =052120000
01035  0 6700 006          600         LSH     6
01036  2 35 0 01055        601         STA     MSGIMG+8,X
01037  0 41 0 01030        602         BRX     IN3D
01040  0 71 0 01712        603         LDX     =-19**0177777       OUTPUT ERROR MESSAGE
01041  0 02 0 02641        604         TYP     0,1,4
01042  2 12 0 01616        605         MIB     ERMSG9+19,X
01043  0 41 0 01042        606         BRX     $-1
01044  0 02 14000          607         TOP     0
01045  0 40 14000          608         CAT     0
01046  0 01 0 01045        609         BRU     $-1
01047  0 02 0 02041        610         TYP     0,1,1               OUTPUT 8 CHARACTERS
01050  0 71 0 01674        611         LDX     =-8**0177777
01051  2 12 0 01055        612         MIB     MSGIMG+8,X
01052  0 41 0 01051        613         BRX     $-1
01053  0 12 0 01503        614         MIB     ERMSG1+3            CR
01054  0 01 0 00412        615         BRU     GOTOP
                           616 *
                           617 *
01055                      618 MSGIMG  RES     8
                           619         PAGE
                           620 *
                           621 *  CHECK INPUT DATA SUBROUTINE.
                           622 *
01065  0 00 0 00000        623 CHECK   PZE
01066  0 35 0 01626        624         STA     ERMSG0+6            SAVE BLOCK NO.
01067  0 23 0 01236        625         EXU     RCET                CHECK FOR ERROR
01070  0 01 0 01141        626         BRU     PARERR              GO TO PARITY ERROR ROUTINE
01071  0 40 20001          627         OVT                         CHECK FOR PREVIOUSLY NOTED ERROR
01072  0 01 0 01141        628         BRU     PARERR              GO TO PARITY ERROR ROUTINE
01073  0 23 0 01242        629         EXU     RASC                STORE CHANNEL ADDRESS
01074  0 33 0 01444        630         PIN     T1
01075  0 36 0 01445        631         STB     T1+1                SAVE EXPECTED
01076  0 76 0 01444        632         LDA     T1
01077  0 17 0 01445        633         EOR     T1+1                COMPARE ACTUAL WITH EXPECTED
01100  0 72 0 01670        634         SKA     =-1                 AGREE
01101  0 01 0 01154        635         BRU     PINERR              NO
01102  0 71 0 01650        636 CHECK2  LDX     =-64**0177777       YES
01103  0 76 0 01675        637         LDA     =0C
01104  0 75 0 01636        638         LDB     =077
01105  2 70 0 01444        639         SKM     BUFFER+64,X         CHECK INPUT BUFFER
01106  0 01 0 01112        640         BRU     CHECK1              ERROR
01107  0 55 0 01657        641         ADD     =1
```

Table 4-4. 925/930 Computers, Extended Mode I/O Test Program (Sheet 15 of 20)

```
01110  0 41 0 01105      642          BRX     $-3
01111  0 51 0 01055      643          BRR     CHECK              EXIT IF ALL CORRECT
                         644 *
01112  0 40 20040        645 CHECK1   BPT     4                  ERROR STOP PERMITTED?
01113  0 51 0 01055      646          BRR     CHECK              NO. EXIT
01114  0 35 0 01444      647          STA     T1                 YES
01115  0 6700 003        648          LSH     3                  FORMAT EXPECTED
01116  0 16 0 01444      649          MRG     T1
01117  0 14 0 01710      650          ETR     =0707
01120  0 6700 006        651          LSH     6
01121  0 16 0 01713      652          MRG     =012000052
01122  0 35 0 01631      653          STA     ERMSG0+9           STORE EXPECTED
01123  2 76 0 01444      654          LDA     BUFFER+64,X        FORMAT RECEIVED
01124  0 6600 003        655          RSH     3
01125  2 76 0 01444      656          LDA     BUFFER+64,X
01126  0 6700 003        657          LSH     3
01127  0 14 0 01710      658          ETR     =0707
01130  0 6700 006        659          LSH     6
01131  0 16 0 01713      660          MRG     =012000052
01132  0 35 0 01634      661          STA     ERMSG0+12          STORE RECEIVED
01133  0 71 0 01676      662          LDX     =-13**0177777
01134  0 23 0 01241      663          EXU     RDIS               DISCONNECT READER CHANNEL
01135  0 02 0 02641      664          TYP     0,1,4
01136  2 12 0 01635      665          MIB     ERMSG0+13,X
01137  0 41 0 01136      666          BRX     $-1
01140  0 01 0 00412      667          BRU     GOTOP
                         668 *
                         669 *  PARITY ERROR SUBROUTINE
                         670 *
01141  0 40 20040        671 PARERR   BPT     4                  ERROR STOP PERMITTED?
01142  0 51 0 01055      672          BRR     CHECK              NO
01143  0 23 0 01241      673          EXU     RDIS               YES, DISCONNECT READER CHANNEL
01144  0 02 0 02641      674          TYP     0,1,4
01145  0 71 0 01714      675          LDX     =-9**0177777
01146  2 12 0 01627      676          MIB     ERMSGP+9,X         OUTPUT PARITY ERROR MESSAGE
01147  0 41 0 01146      677          BRX     $-1
01150  0 02 14000        678          TOP     0
01151  0 40 14000        679          CAT     0
01152  0 01 0 01151      680          BRU     $-1
01153  0 01 0 01102      681          BRU     CHECK2             RETURN TO CHECK NUMBERS
                         682 *
                         683 *   PIN ADDRESS ERROR SUBROUTINE
                         684 *
01154  0 40 20040        685 PINERR   BPT     4                  ERROR STOP PERMITTED
01155  0 01 0 01102      686          BRU     CHECK2             NO
01156  0 76 0 01444      687          LDA     T1                 YES
01157  0 43 0 00537      688          BRM     MKOCT              EXPAND ACTUAL TO BCD
01160  0 35 0 00605      689          STA     OTPNM2             SAVE
```

Table 4-4. 925/930 Computers, Extended Mode I/O Test Program (Sheet 16 of 20)

```
01161  0 36 0 00636      690          STB     BTPNM2+1
01162  0 76 0 01445      691          LDA     T1+1              EXPAND EXPECTED TO BCD
01163  0 43 0 00537      692          BRM     MKBCT
01164  0 35 0 00577      693          STA     BTPNM1            SAVE
01165  0 36 0 00630      694          STB     BTPNM1+1
01166  0 23 0 01241      695          EXU     RDIS              DISCONNECT READER
01167  0 02 0 02641      696          TYP     0,1,4
01170  0 71 0 01672      697          LDX     =-15**0177777
01171  2 12 0 00574      698          MIB     BTPNM+15,X        OUTPUT GENERAL MESSAGE
01172  0 41 0 01171      699          BRX     $-1
01173  0 12 0 01624      700          MIB     ERMSG0+4          OUTPUT BLOCK NO.
01174  0 12 0 01625      701          MIB     ERMSG0+5
01175  0 12 0 01626      702          MIB     ERMSG0+6
01176  0 01 0 00533      703          BRU     BTPIN2            GO OUTPUT RECEIVED AND EXPECTED
                          704 *
                          705 *  START TAPE READER SUBROUTINE
                          706 *
01177  0 00 0 00000      707 STARTP   PZE
01200  0 71 0 01650      708          LDX     =-64**0177777
01201  0 46 30003        709          CLR
01202  2 35 0 01444      710          STA     BUFFER+64,X       CLEAR BUFFER
01203  0 41 0 01202      711          BRX     $-1
01204  0 23 0 01240      712          EXU     RPT               START TAPE
01205  0 51 0 01177      713          BRR     STARTP            EXIT
                          714          PAGE
                          715 *
                          716 *  I/O CHANNEL COMMANDS
                          717 *
01206  002 146 0 00      718 PIOSP    IOSP    IMAGE,64
01207  0100 01244
01210  002 142 0 00      719 PIOSD    IOSD    IMAGE,64
01211  0100 01244
                          720 *
01212  002 142 0 00      721 RIOSD    IOSD    BUFFER,64
01213  0100 01344
01214  002 146 0 00      722 RIOSP    IOSP    BUFFER,65
01215  0101 01344
01216  002 146 0 00      723 RIOSP1   IOSP    BUFFER,32
01217  0040 01344
01220  002 144 0 00      724 RIORP    IORP    BUFFER+32,33
01221  0041 01404
01222  002 140 0 00      725 RIORD    IORD    BUFFER,56
01223  0070 01344
                          726 *
                          727 *
                          728 *  I/O CHANNEL INSTRUCTIONS.
                          729 *
01224  0 40 14000        730 PCAT     CAT     0
```

Table 4-4. 925/930 Computers, Extended Mode I/O Test Program (Sheet 17 of 20)

```
01225  0 40 12000          731 PCZT   CZT     0
01226  0 40 11000          732 PCET   CET     0
                            733 *
01227  0 02 0 02044        734 PPT    PPT     0,1,1
01230  0 02 0 00044        735 PTL    PTL     0,1,1
01231  0 02 00000          736 PDIS   DSC     0
01232  0 02 12000          737 PASC   ASC     0
01233  0 02 50000          738 PALC   ALC     0
                            739 *
                            740 *
01234  0 40 14000          741 RCAT   CAT     0
01235  0 40 12000          742 RCZT   CZT     0
01236  0 40 11000          743 RCET   CET     0
01237  0 40 10400          744 RCIT   CIT     0
                            745 *
01240  0 02 0 02004        746 RPT    RPT     0,1,1
01241  0 02 00000          747 RDIS   DSC     0
01242  0 02 12000          748 RASC   ASC     0
01243  0 02 50000          749 RALC   ALC     0
                            750 *
                            751 *
                            752 *  OUTPUT IMAGE AREA, INPUT BUFFER AREA
                            753 *
01244                       754 IMAGE  RES     64
01344                       755 BUFFER RES     64
                            756 *
                            757 *
                            758 *  TEMPORARY STORAGE AND FLAGS
                            759 *
01444                       760 T1     RES     13
01461                       761 SPF    RES     1                  IOSP INPUT FLAG
01462                       762 PRF    RES     1                  PUNCH REPEAT FLAG
                            763        PAGE
                            764 *
                            765 *  ERROR AND STATUS MESSAGES.
                            766 *
01463  52233021             767 DISMSG BCD     52,!CHANNEL ERRORGUSLY DISCONNECTED BEFORE C=0, DURING
01464  45452543
01465  12255151
01466  46514664
01467  62437012
01470  24316223
01471  46454525
01472  23632524
01473  12222526
01474  46512512
01475  23130073
01476  12246451
```

Table 4-4. 925/930 Computers, Extended Mode I/O Test Program (Sheet 18 of 20)

```
01477  31452712
01500  31466247          768 ERMSG1 BCD     16,IOSP, OUTPUT. !!
01501  73124664
01502  63476463
01503  33125252
01504  31466224          769 ERMSG2 BCD     16,IOSD, OUTPUT. !!
01505  73124664
01506  63476463
01507  33125252
01510  52233021          770 ERMSG4 BCD     52,!CHANNEL DID NOT DISCONNECT WHEN C=0 ON IOSD INPUT!
01511  45452543
01512  12243124
01513  12454663
01514  12243162
01515  23464545
01516  25236312
01517  66302545
01520  12231300
01521  12464512
01522  31466224
01523  12314547
01524  64635212
01525  31466224          771 ERMSG5 BCD     12,IOSD, INPUT!
01526  73123145
01527  47646352
01530  52233021          772 ERMSG6 BCD     52,!CHANNEL DISCONNECTED DURING IOSP INPUT, CIT NEVER
01531  45452543
01532  12243162
01533  23464545
01534  25236325
01535  24122464
01536  51314527
01537  12314662
01540  47123145
01541  47646373
01542  12233163
01543  12452565
01544  25511212
01545  63516425          773        BCD     8,TRUE. !
01546  33125212
01547  52246451          774 ERMSG7 BCD     48,!DURING IOSP INPUT C=0 INDICATING EOR PAST BUT C
01550  31452712
01551  31466247
01552  12314547
01553  64631223
01554  13001231
01555  45243123
01556  21633145
```

Table 4-4. 925/930 Computers, Extended Mode I/O Test Program (Sheet 19 of 20)

```
01557  27122546
01560  51124721
01561  62631222
01562  64631223
01563  31631266          775          BCD      20,IT WAS NEVER TRUE. !
01564  21621245
01565  25652551
01566  12635164
01567  25331252
01570  31466247          776 ERMSG8   BCD      12,!0SP, INPUT!
01571  73123145
01572  47646352
01573  52314651          777 ERMSG9   BCD      52,!!0RD 0N INPUT DID N0! IGN0RE THE LAST 8 CHARACTERS,
01574  24124645
01575  12314547
01576  64631224
01577  31241245
01600  46631231
01601  27454651
01602  25126330
01603  25124321
01604  62631210
01605  12233021
01606  51212363
01607  25516273
01610  12226463          778          BCD      24, BUT READ THE F0LL0WING!
01611  12512521
01612  24126330
01613  25122646
01614  43434666
01615  31452752
01616  52524721          779 ERMSGP   BCD      8,!!PARITY
01617  51316370
01620  52314547          780 ERMSG0   BCD      40,!INPUT ERR0R IN BL0CK N0. N!EXPECTED DD!
01621  64631225
01622  51514651
01623  12314512
01624  22434623
01625  42124546
01626  33124552
01627  25674725
01630  23632524
01631  12242452
01632  51252325          781          BCD      12,RECEIVED DD!
01633  31652524
01634  12242452
                         782 *
01635  0 12 0 00000      783 MIBX     MIB      0                    0UTPUT INSTRUCTI0N
```

Table 4-4. 925/930 Computers, Extended Mode I/O Test Program (Sheet 20 of 20)

```
                                    784 *
                                    785 *
          00000200                  786         END     BEGIN
01636     00000077
01637     00606047
01640     00606051
01641     00606062
01642     00000070
01643     00177774
01644     50277677
01645     00177775
01646     57737677
01647     50277777
01650     77777776
01651     00002000
01652     00177766
01653     70277777
01654     00000004
01655     00000003
01656     00040000
01657     00000001
01660     00177700
01661     01000000
01662     00001500
01663     52121225
01664     51514651
01665     12246451
01666     31452712
01667     00001504
01670     77777777
01671     00001344
01672     00177761
01673     00177764
01674     00177770
01675     00000000
01676     00177763
01677     00001525
01700     33120152
01701     00001444
01702     00177757
01703     33120252
01704     00001570
01705     33120352
01706     33120452
01707     00001434
01710     00000707
01711     52120000
01712     00177755
01713     12000052
01714     00177767
```

4.64 Operation

4.65 To select the reader and punch units to be used enter:

"CU" P to select punch,

"CU" R to select reader.

The letter C is the channel number and may be any digit 0-7 and the letter U is the unit, either one or two. The reader and punch need not be on the same channel.

4.66 The test is started by entering the letter "S". Control of the test operation is then a function of the Breakpoint Switches. Table 4-5 summarizes the switch functions.

4.67 When running cyclic tests from punch to read, the tape from the punch should be inserted into the reader.

4.68 Punching

4.69 The program punches four blocks of 64 characters each in one pass. The characters form a counting sequence from 00 to 77$_8$. The first block is started with leader and output with an IOSP. All punching is done in the one character per word mode. When the word count reaches zero, an IOSD is loaded to punch a second block of 64 characters. No leader is punched between the first and second blocks. This results in one physical block 128 characters long. Starting with leader, two additional blocks of 64 characters are then punched with an IOSD.

4.70 At the conclusion of each output operation, the channel address register is stored and compared with the expected value. If they do not agree, the program types the expected and actual values.

4.71 The program tests the channel during the output operation to see if the channel should erroneously disconnect before the word count reaches zero.

4.72 Reading

4.73 Each of the four blocks is read with a different set of commands and counts so as to test as many operations as possible. After reading a block, a general subroutine checks for input parity errors, for channel end address agreement with the expected address, and the data read character by character. Error messages with block numbers are typed in the event of any one of these tests failing. In the event of a test failing, reference should then be made to the test program flow diagram and troubleshooting information contained in Section 5 of this manual. The handling of each block is as follows:

a. Block 1. The first block is one-half of a 128 character physical block. Reading one character per word, an IOSD with a count of 64 is used to read this block. The program checks to see if the count reaches zero and the channel becomes inactive at the same time.

b. Block 2. This is the second half of the first physical block and is read with an IOSP with a count of 65. The read should terminate because of the end of record. The program checks to see that the word count does not reach zero and the channel remains active after the CIT (inter-record test) instruction skips. The tape is

Table 4-5. 9300 Computer Breakpoint Switch Functions

Breakpoint Switch	Reset	Set
1	Run in the normal mode as determined by the other switches	Stop and return to keyboard control at the end of the current pass (punch or read)
2	Continue to run test selected by switch 3	Cycle test runs from punch to read to punch and so on
3*	Selects punch mode	Selects to punch and so on
4	Stop and type diagnostic messages whenever an error occurs	Do not stop and type on errors but continue to run

*Used when switch 2 is reset or when starting test

finally stopped with a disconnect before the data is checked.

c. Block 3. Block 3 is a 64 character physical block. It is read with two channel commands. The first is an IOSP with a count of 32. If the count goes to zero before the channel disconnects, an IORP with a count of 33 is loaded. This should cause the inter-record indicator to be turned on at the end of the record. The count should not reach zero and the channel should remain active. The tape is again stopped with a disconnect before the data is checked.

d. Block 4. This is the third physical block of 64 characters and is read with an IORD with a count of 56. The program waits for the channel to be inactive then checks to see if the channel ignored the last eight characters. If the tape was erroneously stopped after the 56th character, it will show up as a failure on the first block of the next read pass.

4.74 Test Program

4.75 Table 4-6 gives the test program for the 9300 computer I/O extended mode.

Table 4-6. 9300 Computer, Extended Mode I/O Test Program (Sheet 1 of 20)

```
00022124    1 TYPE   EQU     9300                MACHINE DEFINITION: 9300
            2 *
            3 *
            4 *  EXTENDED MODE I/O TEST PROGRAM. (925/930/9300 ALL CHANNELS)
            5 *
            6 *  A.W. ENGLAND, SDS
            7 *
            8 *
            9 *      THIS PROGRAM USES THE PAPER TAPE READER AND PUNCH TO CHECK THE
           10 *  OPERATION OF THE I/O CHANNELS IN THE EXTENDED INTERLACE MODE OF
           11 *  OPERATION.  THE READER AND PUNCH MAY BE CONNECTED TO ANY INTERLACED
           12 *  IMCC OR DACC.  THEY NEED NOT BE ATTACHED TO THE SAME CHANNEL.  THE
           13 *  PROGRAM ADDRESSES THE KEYBOARD FOR INFORMATION ABOUT UNIT AND CHANNEL
           14 *  SELECTION.
           15 *
           16 *      TO SELECT PUNCH TYPE:  'CU'P
           17 *
           18 *      TO SELECT READER TYPE: 'CU'R
           19 *
           20 *      WHERE 'C' REPRESENTS CHANNEL NO. AND MAY HAVE THE VALUES 0-7;
           21 *  AND 'U' REPRESENTS UNIT NO. AND MAY HAVE THE VALUE 1-2.  THE LETTER
           22 *  P OR R CAUSE THE SELECTION TO BE MADE WITH THE TWO PREVIOUS DIGITS.
           23 *  SPACES SHOULD NOT BE TYPED BETWEEN DIGITS OR CONTROL CHARACTER.
           24 *
           25 *      TO START THE TEST TYPE:  S
           26        PAGE
           27 *
           28 *
           29 *      BREAKPOINTS OR SENSE SWITCHES CONTROL THE RUNNING OF THE PROGRAM:
           30 *
           31 *     SWITCH          RESET                          SET
           32 *     ------          -----                          -----
           33 *
           34 *      BP 1     RUN IN THE NORMAL MODE    STOP AT THE END OF THE CURRENT
           35 *      SW 1     AS DETERMINED BY THE      PASS AND RETURN TO KEY BOARD
           36 *               OTHER SWITCHES.           CONTROL
           37 *
           38 *
           39 *      BP 2     CONTINUE TO RUN THE       CYCLE TEST RUNS FROM READ TO
           40 *      SW 2     TEST MODE SELECTED BY     PUNCH TO READ, ETC.
           41 *               SWITCH 3.
           42 *
           43 *
           44 *      BP 3     SELECTS PUNCH MODE        SELECTS READ MODE.
           45 *      SW 3     (USED WHEN SWITCH 2 IS RESET OR WHEN STARTING THE TEST)
           46 *
           47 *
           48 *      BP 4     STOP AND TYPE DIAGNOSTIC DO NOT STOP OR TYPE ON ERRORS.
```

Table 4-6. 9300 Computer, Extended Mode I/O Test Program (Sheet 2 of 20)

```
49 *       SW 4     MESSAGES WHENEVER AN      CONTINUE RUNNING REGARDLESS.
50 *                ERROR OCCURS.
51 *
52 *
53 *  NOTE: TO RUN CONTINOUS FROM READ TO PUNCH THE OUTPUT OF THE PUNCH
54 *        SHOULD BE FED INTO THE READER.  A LOOP SHOULD BE USED TO RUN
55 *        CONTINOUS ON THE READER.
56          PAGE
57 *
58 *   THE FOLLOWING SECTION OF CODE DEFINES EITHER A 925/930 INSTRUCTION
59 *   SET OR A 9300 INSTRUCTION SET. THIS IS DONE ON THE BASIS OF THE
60 *   MACHINE TYPE STATEMENT AT THE BEGINNING OF THE DECK.
61 *
62 *
63 *
64 *
65          PROC
66  DF9300  NAME
67  $INST   FORM    3,6,15
68  P       PROC    1                       DEFINE INDEX OP'S TO IMPLY X1.
69  $LDX    NAME    017
70  $STX    NAME    077
71  $BRX    NAME    057
72          INST    (P(*1)*/2)++1,P(0),P(1)
73          END
74  P       PROC    1
75  $XAB    NAME    037733                  DEFINE COMPATIBLE REGISTER OP'S
76  $ABC    NAME    037731
77  $BAC    NAME    037713
78  $CLR    NAME    037711
79          INST    0,040,P(0)
80          END
81  P       PROC    1
82  $RSH    NAME    000                     DEFINE COMPATIBLE SHIFTS
83  $RCY    NAME    002
84  $LSH    NAME    004
85  $LCY    NAME    006
86  $NOD    NAME    044
87  $SHFT   FORM    3,6,6,9
88          SHFT    P(2),060,P(0),P(1)**0777
89          END
90  P       PROC    1                       DEFINE MISC. COMPATIBLE OP'S.
91  $MIN    NAME    071
92  $MIB    NAME    030
93  $RIM    NAME    032
94          INST    (P(*1)*/2)++P(2),P(0),P(1)
95          END
96 *
```

Table 4-6. 9300 Computer, Extended Mode I/O Test Program (Sheet 3 of 20)

```
 97 $X      EQU     1                       DEFINE INDEX TAG*X* FOR X1
 98 *                                       END CONSTANT
 99         ORG     0177
100 $E9DC   DATA    04000000                END CONSTANT
101 *
102 $SWTFRM    FORM  3,6,3,12
103 Q       PROC    1
104 $BPT    NAME    040000
105 $OVT    NAME    014040
106 $ROV    NAME    04000
107 $SOV    NAME    00040
108         SWTFRM  0,022,Q(0)*/(-12)**7,Q(0)**07777++(Q(1)>0)*/(6-Q(1))
109         END
110         END
111 *
112         PROC
113 DF930   NAME
114 *
115 * IF NOT A 9300 THEN DO THE FOLLOWING OPERATIONS
116 *
117 P       PROC    1                       DEFINE I/O INSTRUCTIONS
118 $MIB    NAME    012
119 $BIM    NAME    032
120 INST    FORM    3,6,1,14
121         INST    P(2),P(0),P(*1),P(1)
122         END
123 *
124 $X      EQU     2                       DEFINE INDEX TAG *X* FOR 2 ON 930
125 *
126 *
127         ORG     0177
128 $E9DC   DATA    0400000                 END CONSTANT
129 *
130 *
131 N       PROC    1                       SET OVERFLOW
132 $SOV    NAME
133         BRR     $,4
134         END
135 *
136 M       PROC    1                       BRANCH AND CLEAR INTERRUPT
137 $BRC    NAME
138         DO      M(*1),1,2
139         BRU     M(1)
140         BRU     *$+1
141         PZE     M(1)
142         END
143 P       PROC    1
144 $DSC    NAME    0
```

Table 4-6. 9300 Computer, Extended Mode I/O Test Program (Sheet 4 of 20)

```
                                  145 $ALC    NAME    050000
                                  146 $ASC    NAME    012000
                                  147 $TOP    NAME    014000
                                  148 I       FORM    3,6,15
                                  149         I       P(1)**2,(P(1)**4)*/3++2,P(0)++(P(1)**1)*/6
                                  150         END
                                  151 P       PROC    1
                                  152 $CAT    NAME    014000
                                  153 $CET    NAME    011000
                                  154 $CIT    NAME    010400
                                  155 $CZT    NAME    012000
                                  156 I       FORM    3,6,15
                                  157         I       P(1)**2,040,P(0)++(P(1)**4)*/12++(P(1)**1)*/6
                                  158         END
                                  159         END
                                  160         DO      TYPE=9300
00177  04000000                   161         DF9300
                                  162         DO      TYPE<9300
                                  163         DF930
                                  164         PAGE
                                  165 *
                                  166 *  THE START OF THE PROGRAM
                                  167 *
00200                             168         AORG    0200
00200  0 0 16 00203               169 BEGIN   LDA     BRUGO              INITIALIZE RECOVERY LOCATIONS
00201  0 0 76 00001               170         STA     1
00202  0 0 76 00032               171         STA     032
00203  0 0 01 00204               172 BRUGO   BRU     KYBD
00204  0 0 21 01241               173 KYBD    EXU     RDIS
00205  0 0 21 01231               174         EXU     PDIS
00206  0 40 37711                 175 G02     CLR
00207  0 0 76 01444               176         STA     T1
00210  0 02 0 02001               177         RKB     0,1,1
00211  0 32 01445                 178 G01     BIM     T1+1               READ CHARACTER
00212  0 0 16 01445               179         LDA     T1+1
00213  0 0 14 01636               180         LDB     =077
00214  0 0 55 01637               181         SKM     =' P'              CHECK FOR CONTROL CHAR.
00215  0 0 01 00217               182         BRU     $+2
00216  0 0 01 00233               183         BRU     PO
00217  0 0 55 01640               184         SKM     =' R'
00220  0 0 01 00222               185         BRU     $+2
00221  0 0 01 00256               186         BRU     RO
00222  0 0 55 01641               187         SKM     =' S'
00223  0 0 01 00225               188         BRU     $+2
00224  0 0 03 00317               189         BRM     SO
00225  0 0 54 01642               190         SKA     =070               CHECK FOR DIGIT
00226  0 0 01 00206               191         BRU     G02                 IF NOT CONTROL OR DIGIT CLEAR
00227  0 0 14 01444               192         LDB     T1
```

Table 4-6. 9300 Computer, Extended Mode I/O Test Program (Sheet 5 of 20)

```
00230  0 0 74 01446      193          STB     T1+2                SAVE CHANNEL NUMBER IN T1+2
00231  0 0 76 01444      194          STA     T1                  SAVE UNIT NUMBER IN T1
00232  0 0 01 00211      195          BRU     G01
                         196          PAGE
                         197 *
                         198 *    PUNCH CHANNEL SET UP ROUTINE
                         199 *
00233  0 0 03 00323      200 PO       BRM     MAKECH              GET CHANNEL NO. BUILT. SAVED IN T1+2
00234  1 17 01643        201          LDX     =-4**0177777        UPDATE EOM/EOD'S
00235  0 1 16 01234      202          LDA     PALC+1,X
00236  0 0 11 01644      203          ETR     =050277677
00237  0 0 13 01446      204          MRG     T1+2                INSERT CHANNEL DESIGNATION
00240  1 0 76 00235      205          STA     *$-3
00241  1 57 00235        206          BRX     $-4
00242  1 17 01645        207          LDX     =-3**0177777        UPDATE SKS'S
00243  0 1 16 01227      208          LDA     PCET+1,X
00244  0 0 11 01646      209          ETR     =057737677
00245  0 0 13 01447      210          MRG     T1+3
00246  1 0 76 00243      211          STA     *$-3
00247  1 57 00243        212          BRX     $-4
00250  1 17 01643        213          LDX     =-4**0177777        UPDATE CHANNEL COMMANDS
00251  0 1 16 01212      214          LDA     PIOSD+2,X
00252  0 0 11 01647      215          ETR     =050277777
00253  0 0 13 01450      216          MRG     T1+4
00254  1 0 76 00251      217          STA     *$-3
00255  1 57 00256        218          BRX     $+1
00256  1 57 00251        219          BRX     $-5
00257  0 0 16 01230      220          LDA     PTL                 UPDATE UNIT NO.
00260  0 0 11 01650      221          ETR     =-2
00261  0 0 13 01444      222          MRG     T1
00262  0 0 76 01230      223          STA     PTL
00263  0 0 13 01651      224          MRG     =02000              MAKE NO LEADER EOM
00264  0 0 76 01227      225          STA     PPT
00265  0 0 01 00204      226          BRU     KYBD
                         227 *
                         228 *    READER CHANNEL SET UP ROUTINE
                         229 *
                         230 *
00266  0 0 03 00323      231 RC       BRM     MAKECH              GET CHANNEL NO BUILT
00267  1 17 01643        232          LDX     =-4**0177777        UPDATE EOM/EOD'S
00270  0 1 16 01244      233          LDA     RALC+1,X
00271  0 0 11 01644      234          ETR     =050277677
00272  0 0 13 01446      235          MRG     T1+2
00273  1 0 76 00270      236          STA     *$-3
00274  1 57 00270        237          BRX     $-4
00275  1 17 01643        238          LDX     =-4**0177777        BUILD SKS'S
00276  0 1 16 01240      239          LDA     RCIT+1,X
00277  0 0 11 01646      240          ETR     =057737677
```

Table 4-6. 9300 Computer, Extended Mode I/O Test Program (Sheet 6 of 20)

```
00300  0 0 13 01447      241          MRG     T1+3
00301  1 0 76 00276      242          STA     *$-3
00302  1 57 00276        243          BRX     $-4
00303  1 17 01652        244          LDX     =-10**0177777        BUILD CHANNEL COMMAND EOM/EOD'S
00304  0 1 16 01224      245          LDA     RIORD+2,X
00305  0 0 11 01653      246          ETR     =070277777
00306  0 0 13 01450      247          MRG     T1+4
00307  1 0 76 00304      248          STA     *$-3
00310  1 57 00311        249          BRX     $+1
00311  1 57 00304        250          BRX     $-5
00312  0 0 16 01240      251          LDA     RPT                   BUILD RPT WITH UNIT NO.
00313  0 0 11 01650      252          ETR     =-2
00314  0 0 13 01444      253          MRG     T1
00315  0 0 76 01240      254          STA     RPT
00316  0 0 01 00204      255          BRU     KYBD
                         256 *
                         257 *
                         258 *    START TEST RUNNING
                         259 *
00317  0 02 00000        260 SO       DSC     0                     DISCONNECT
00320  0 22 4 0010       261          BPT     3                     START READ OR PUNCH?
00321  0 0 01 00640      262          BRU     IN                    READ
00322  0 0 01 00356      263          BRU     OUT                   PUNCH
                         264          PAGE
                         265 *
                         266 *    BUILD CHANNEL NO. SUBROUTINE
                         267 *
00323  0 0 00 00000      268 MAKECH   PZE
00324  0 40 37711        269          CLR
00325  0 0 16 01446      270          LDA     T1+2                  GET CH. NO.
00326  0 0 54 01654      271          SKA     =4                    EOD REQUIRED
00327  0 0 14 00177      272          LDB     EODC                  YES
00330  0 0 74 01450      273          STB     T1+4                  NO, SAVE EOD BIT.
00331  0 0 11 01655      274          ETR     =3
00332  0 0 76 01446      275          STA     T1+2
00333  1 17 01446        276          LDX     T1+2
00334  0 0 16 01450      277          LDA     T1+4
00335  0 1 13 00352      278          MRG     MAKETB,X              BUILD EOM/EOD SELECTION
00336  0 0 76 01446      279          STA     T1+2                  SAVE EOM
00337  0 40 37713        280          BAC                           BUILD SKS SELECTION
00340  0 0 54 00177      281          SKA     EODC
00341  0 0 14 01656      282          LDB     =040000
00342  0 40 37733        283          XAB
00343  0 1 13 00352      284          MRG     MAKETB,X
00344  0 0 76 01447      285          STA     T1+3                  SAVE SKS
00345  0 0 16 01444      286          LDA     T1                    BUILD UNIT NO. BIT
00346  0 0 11 01657      287          ETR     =1
00347  0 0 12 01657      288          EOR     =1
```

Table 4-6. 9300 Computer, Extended Mode I/O Test Program (Sheet 7 of 20)

```
00350  0 0 76 01444          289          STA     T1                    SAVE UNIT NO. BIT
00351  0 0 41 00323          290          BRR     MAKECH                EXIT
                             291 *
00352  00000000              292 MAKETB   DATA    0,0100,020000000,020000100
00353  00000100
00354  20000000
00355  20000100
                             293          PAGE
                             294 *
                             295 *  PAPER TAPE PUNCH OUTPUT SECTION.
                             296 *
00356  1 17 01660            297 OUT      LDX     =-64**0177777         SET UP OUTPUT IMAGE WITH 64 WORDS
00357  0 40 37711            298          CLR
00360  0 1 76 01344          299          STA     IMAGE+64,X
00361  0 0 05 01651          300          ADD     =01000000
00362  1 57 00360            301          BRX     $-2
00363  0 0 21 01230          302 OUT4     EXU     PTL                    START PUNCH WITH LEADER
00364  0 0 21 01233          303          EXU     PALC                   ALERT CHANNEL
00365  0 0 21 01236          304          LCH     PIOSP                  LOAD IOSP IMAGE,64
00366  0 0 31 01237
00367  1 17 01643            305          LDX     =-4**0177777          SET UP FOR SUBROUTINE TO TYPE:
00370  0 0 14 01652          306          LDB     =ERMSG1                IOSP, OUTPUT
00371  0 0 16 00431          307          LDA     PCATC
00372  0 0 03 00610          308          BRM     WCZ                    WAIT FOR CHANNEL COUNT = ZERO
00373  0 0 21 01226          309          EXU     PCET                   ERROR ON OUTPUT
00374  0 22 4 0004           310          BPT     4                      YES, CHECK BP4 FOR NO STOP
00375  0 0 01 00416          311          BRU     OUT4A                  NO, NO STOP ON ERROR
00376  0 0 21 01231          312 OUT2     EXU     PDIS                   ERROR, DISCONNECT CHANNEL
00377  0 02 0 02641          313          TYP     0,1,4                  TYPE GENERAL ERROR MESSAGE
00400  0 30 01663            314          MIB     =052121225             I  E
00401  0 30 01664            315          MIB     =051514651             RROR
00402  0 30 01665            316          MIB     =012246451              DUR
00403  0 30 01666            317          MIB     =031452712             ING
00404  0 40 37733            318          XAB                            TYPE SPECIFIC ERROR MESSAGE
00405  0 0 13 01635          319          MRG     MIBX
00406  0 0 76 00407          320          STA     $+1
00407  0 30 00000            321          MIB     00                     TO BE REPLACED AT RUN TIME
00410  0 71 00407            322          MIN     $-1
00411  1 57 00407            323          BRX     $-2
00412  0 02 14000            324 GETOP    TOP     0
00413  0 20 14000            325          CAT     0
00414  0 0 01 00413          326          BRU     $-1
00415  0 0 01 00204          327          BRU     KYBD
                             328 *
00416  0 0 03 00476          329 OUT4A    BRM     OUTPIN                 GO PIN AND CHECK CHANNEL ADDRESS
00417  0 0 21 01224          330          EXU     PCAT                   IF CHANNEL INACTIVE READDRESS PUNCH
00420  0 0 01 00422          331          BRU     $+2
00421  0 0 21 01227          332          EXU     PPT
```

Table 4-6. 9300 Computer, Extended Mode I/O Test Program (Sheet 8 of 20)

```
00422  0 0 21 01233          333          EXU     PALC
00423  0 0 21 01210          334          LCH     PIOSD                LOAD CH. IOSD IMAGE,64
00424  0 0 31 01211
00425  1 17 01643            335 OUT1     LDX     =-4**0177777         SET UP ERROR MESSAGE:
00426  0 0 14 01657          336          LDB     =ERMSG2               IOSD, OUTPUT
00427  0 0 16 00431          337          LDA     PCATC
00430  0 0 03 00610          338          BRM     WCZ                   WAIT FOR COUNT EQUAL ZERO
00431  0 0 21 01224          339 PCATC    EXU     PCAT                  CHAN. ACTIVE?
00432  0 0 01 00431          340          BRU     $-1                   YES
00433  0 0 21 01226          341          EXU     PCET                  NO, ERROR?
00434  0 22 4 0004           342          BPT     4                     YES, IS STOP ALLOWED?
00435  0 0 01 00437          343          BRU     $+2                   NO ERROR OR NO STOP
00436  0 0 01 00376          344          BRU     OUT2                  ERROR STOP ALLOWED
00437  0 0 03 00476          345          BRM     OUTPIN                GO PIN AND CHECK CHANNEL ADDRESS
00440  0 40 37711            346          CLR
00441  0 0 76 01452          347          STA     PRF                   R(PUNCH REPEAT)
00442  0 0 21 01230          348 OUT1A    EXU     PTL
00443  0 0 21 01233          349          EXU     PALC
00444  0 0 21 01210          350          LCH     PIOSD                 LOAD IOSD  IMAGE,64
00445  0 0 31 01211
00446  1 17 01643            351          LDX     =-4**0177777          SET UP ERROR MESSAGE:
00447  0 0 14 01657          352          LDB     =ERMSG2
00450  0 0 16 00431          353          LDA     PCATC
00451  0 0 03 00610          354          BRM     WC7
00452  0 0 21 01224          355          EXU     PCAT                  CHAN. ACTIVE?
00453  0 0 01 00452          356          BRU     $-1                   YES
00454  0 0 21 01226          357          EXU     PCET                  NO, CHAN. ERROR
00455  0 22 4 0004           358          BPT     4                     YES, IS ERROR STOP ALLOWED
00456  0 0 01 00450          359          BRU     $+2                   NO,NO
00457  0 0 01 00376          360          BRU     OUT2                  YES
00460  0 0 03 00476          361          BRM     OUTPIN                GO PIN AND CHECK CHANNEL ADDRESS
00461  0 0 53 01452          362          SKN     PRF                   PUNCH REPEAT
00462  0 0 01 00454          363          BRU     $+2                   RESET
00463  0 0 01 00457          364          BRU     OUT3                  SET
00464  0 0 16 01670          365          LDA     =-1                  S(PUNCH REPEAT)
00465  0 0 76 01452          366          STA     PRF
00466  0 0 01 00442          367          BRU     OUT1A
                             368 *
                             369 *
00467  0 22 4 0043           370 OUT3     BPT     1                     GO OR STOR
00470  0 0 01 00234          371          BRU     KYBD                  STOP
00471  0 22 4 0023           372          BPT     2                     GO, CYCLE?
00472  0 0 01 00640          373          BRU     IN                    YES
00473  0 22 4 0013           374          BPT     3                     ONE ONLY
00474  0 0 01 00640          375          BRU     IN
00475  0 0 01 00356          376          BRU     OUT
                             377 *
                             378 *  SUBROUTINE TO CHECK CHANNEL ADDRESS
```

Table 4-6. 9300 Computer, Extended Mode I/O Test Program (Sheet 9 of 20)

```
                        379 *
00476  0 0 00 00000     380 OUTPIN PZE     0
00477  0 0 21 01232     381        EXU     PASC              ALERT TO STORE PUNCH CHANNEL
00500  0 0 33 01444     382        PIN     T1                STORE ADDRESS
00501  0 0 16 01444     383        LDA     T1
00502  0 0 12 01671     384        EOR     =IMAGE+64         COMPARE WITH EXPECTED
00503  0 0 54 01670     385        SKA     =-1
00504  0 22 4 0004      386        BPT     4                 NOT EQUAL
00505  0 0 41 00476     387        BRR     OUTPIN            EQUAL OR ERROR STOP NOT PERMITTED
00506  1 77 01445       388        STX     T1+1              SAVE LENGTH OF ERROR MESSAGE
00507  0 40 37733       389        XAB                       SET UP ERROR OUTPUTTER
00510  0 0 13 01635     390        MRG     MIBX
00511  0 0 76 00530     391        STA     OTPIN1
00512  0 0 16 01671     392        LDA     =IMAGE+64         GENERATE EXPECTED PIN WORD IN BCD
00513  0 0 03 00537     393        BRM     MKOCT
00514  0 0 76 00577     394        STA     OTPNM1            SAVE EXPECTED
00515  0 0 74 00600     395        STB     OTPNM1+1
00516  0 0 16 01444     396        LDA     T1                GENERATE ACTUAL PIN WORD IN BCD
00517  0 0 03 00537     397        BRM     MKOCT
00520  0 0 76 00605     398        STA     OTPNM2
00521  0 0 74 00606     399        STB     OTPNM2+1
00522  0 0 21 01231     400        EXU     PDIS              DISCONNECT PUNCH CHANNEL
00523  1 17 01672       401        LDX     =-15**0177777
00524  0 02 0 02641     402        TYP     0,1,4
00525  1 30 00574       403        MIB     OTPNM+15,X        OUTPUT MESSAGE
00526  1 57 00525       404        BRX     $-1
00527  1 17 01445       405        LDX     T1+1              OUTPUT SPECIAL MESSAGE
00530  0 30 00000       406 OTPIN1 MIB     00
00531  0 71 00530       407        MIN     $-1
00532  1 57 00530       408        BRX     $-2
00533  1 17 01673       409 OTPIN2 LDX     =-12**0177777     OUTPUT RECEIVED AND EXPECTED MESSAGE
00534  1 30 00610       410        MIB     OTPNM2+3,X
00535  1 57 00534       411        BRX     $-1
00536  0 0 01 00412     412        BRU     GOTOP
                        413 *
                        414 *
                        415 *  SUBROUTINE TO MAKE ONE WORD INTO 8 BCD OCTAL DIGITS
                        416 *
00537  0 0 00 00000     417 MKOCT  PZE     0
00540  1 17 01674       418        LDX     =-8**0177777
00541  0 40 37731       419        ABC                       0 TO WORD TO B
00542  0 60 04 003      420        LSH     3                 SHIFT OUT OCTAL DIGIT
00543  0 1 76 01456     421        STA     T1+10,X           SAVE BCD CHARACTER
00544  0 0 16 01675     422        LDA     =0                CLEAR A
00545  1 57 00542       423        BRX     $-3
00546  0 40 37711       424        CLR
00547  1 17 01674       425        LDX     =-8**0177777      REASSEMBLY BCD CHARACTERS INTO A + B.
00550  0 60 06 005      426        LCY     6
```

Table 4-6. 9300 Computer, Extended Mode I/O Test Program (Sheet 10 of 20)

```
00551  0 1 13 01456          427          MRG     T1+10,X
00552  1 57 00550            428          BRX     $-2
00553  0 40 37733            429          XAB
00554  0 0 41 00537          430          BRR     MK0CT                FXIT
                             431 *
                             432 *
                             433 *  ERR0R MESSAGES F0R CHANNEL ADDRESS TEST SUBR0UTINE
                             434 *
00555  52254524              435 0TPNM    BCD     52,!END ADDRESS FR0M CHANNEL DID N0T AGREE WITH EXPECTE
00556  12212424
00557  51256262
00560  12265146
00561  44122330
00562  21454525
00563  43122431
00564  24124546
00565  63122127
00566  51252512
00567  66316330
00570  12256747
00571  25236325
00572  24122126              436          BCD     8,D AFTER
00573  63255112
00574  25674725              437          BCD     12,EXPECTED
00575  23632524
00576  12121212
00577  00000000              438 0TPNM1   DATA    0,0
00600  00000000
00601  73121252              439          BCD     16,,  !RECEIVED
00602  51252325
00603  31652524
00604  12121212
00605  00000000              440 0TPNM2   DATA    0,0
00606  00000000
00607  33125252              441          BCD     4,, !!
                             442          PAGE
                             443 *
                             444 *  WAIT F0R C0UNT EQUAL ZER0 SUBR0UTINE.
                             445 *
00610  0 0 00 00000          446 WCZ      PZE                          ENTRY
00611  0 0 76 00617          447          STA     $+6                  SAVE R/PCAT
00612  0 0 05 01657          448          ADD     =1                   MAKE A CZT
00613  0 0 76 00614          449          STA     $+1                  SAVE R/PCZT
00614  0 20 12000            450          CZT     00                   C = 02?
00615  0 0 01 00617          451          BRU     $+2                  N0
00616  0 0 41 00610          452          BRR     WCZ                  YES
00617  0 20 14000            453          CAT     00                   CHANNEL ACTIVE?
00620  0 0 01 00614          454          BRU     $-4                  YES
```

Table 4-6. 9300 Computer, Extended Mode I/O Test Program (Sheet 11 of 20)

```
00621  0 22 4 0004          455          BPT     4                    NO, INHIBIT ERRORS
00622  0 0 41 00610         456          BRR     WCZ                  YES
00623  1 77 01444           457          STX     T1                   NO, PRINT ERROR MESSAGE
00624  0 40 37733           458          XAB
00625  0 0 13 01635         459          MRG     MIBX
00626  0 0 76 00634         460          STA     $+6
00627  1 17 01676           461          LDX     =-13**0177777
00630  0 02 0 02641         462          TYP     0,1,4
00631  1 30 01500           463          MIB     DISMSG+13,X
00632  1 57 00631           464          BRX     $-1
00633  1 17 01444           465          LDX     T1
00634  0 30 00000           466          MIB     00
00635  0 71 00634           467          MIN     $-1
00636  1 57 00634           468          BRX     $-2
00637  0 0 01 00412         469          BRU     GOTOP
                            470          PAGE
                            471 *
                            472 *  INPUT SECTION
                            473 *
00640  0 0 03 01177         474 IN       BRM     STARTP               START READER
00641  0 22 0 4000          475          ROV
00642  0 0 21 01243         476          EXU     RALC                 ALERT
00643  0 0 21 01212         477          LCH     RIOSD                LOAD IOSD  BUFFER,64
00644  0 0 31 01213
00645  0 0 21 01235         478 INOB     EXU     RCZT                 C=0
00646  0 0 01 00657         479          BRU     INO                  NO
00647  0 0 21 01234         480 RCATC    EXU     RCAT                 YES, CHAN. ACTIVE
00650  0 22 4 0004          481          BPT     4                    YES, ERROR STOP PERMITTED
00651  0 0 01 00670         482          BRU     INOA                 NO, NO CONT.
00652  1 17 01676           483          LDX     =-13**0177777        YES
00653  0 02 0 02641         484          TYP     0,1,4
00654  1 30 01525           485          MIB     ERMSG4+13,X
00655  1 57 00654           486          BRX     $-1
00656  0 0 01 00412         487          BRU     GOTOP
                            488 *
00657  0 0 21 01234         489 INO      EXU     RCAT                 CHAN. ACTIVE STILL?
00660  0 0 01 00645         490          BRU     INOB                 YES
00661  0 0 21 01235         491          EXU     RCZT                 NO, C=0
00662  0 0 01 00664         492          BRU     $+2                  NO
00663  0 0 01 00670         493          BRU     INOA                 YES
00664  1 17 01645           494          LDX     =-3**0177777         SET UP ERROR MESSAGE
00665  0 0 14 01677         495          LDB     =ERMSG5
00666  0 0 16 00647         496          LDA     RCATC
00667  0 0 03 00610         497          BRM     WCZ                  GO DO DISCONNECT ERROR TEST
00670  0 0 16 01700         498 INOA     LDA     =033120152           BLOCK NO. 1
00671  0 0 14 01701         499          LDB     =BUFFER+64           END ADDRESS EXPECTED
00672  0 0 03 01055         500          BRM     CHECK                GO CHECK DATA
00673  0 0 03 01177         501 IN1      BRM     STARTP               START READER IF DATA CHECKED O.K.
```

Table 4-6. 9300 Computer, Extended Mode I/O Test Program (Sheet 12 of 20)

```
00674  0 22 0 4000          502          ROV
00675  0 0 21 01243         503          EXU     RALC
00676  0 0 21 01214         504          LCH     RIOSP              LOAD IOSP BUFFER,65
00677  0 0 31 01215
00700  0 0 16 01670         505          LDA     =-1
00701  0 0 76 01451         506          STA     SPF                S(IOSP INPUT)
00702  0 0 21 01237         507 IN4      EXU     RCIT               INTERRECORD CONDITION
00703  0 0 01 00705         508          BRU     $+2                NO
00704  0 0 01 00732         509          BRU     IN2                YES
00705  0 0 21 01234         510          EXU     RCAT               CHAN. ACTIVE
00706  0 0 01 00716         511          BRU     IN1A               YES
00707  0 22 4 0004          512          BPT     4                  NO, ERROR STOP PERMITTED
00710  0 0 01 00732         513          BRU     IN2                NO
00711  1 17 01672           514          LDX     =-15**0177777      YES
00712  0 02 0 02641         515          TYP     0,1,4
00713  1 30 01547           516          MIB     ERMSG6+15,X
00714  1 57 00713           517          BRX     $-1
00715  0 0 01 00412         518          BRU     GOTOP
                            519 *
00716  0 0 21 01235         520 IN1A     EXU     RCZT               C=0
00717  0 0 01 00702         521          BRU     IN4                NO
00720  0 0 21 01237         522          EXU     RCIT               YES, CHAN. INTER-RECORD
00721  0 0 01 00732         523          BRU     IN2                NO
00722  0 22 4 0004          524          BPT     4                  YES, ERROR STOP PERMITTED
00723  0 0 01 00732         525          BRU     IN2                NO
00724  0 0 21 01241         526          EXU     RDIS               YES, STOP TAPE
00725  1 17 01702           527          LDX     =-17**0177777
00726  0 02 0 02641         528          TYP     0,1,4
00727  1 30 01570           529          MIB     ERMSG7+17,X
00730  1 57 00727           530          BRX     $-1
00731  0 0 01 00412         531          BRU     GOTOP
                            532 *
00732  0 0 21 01236         533 IN2      EXU     RCET               IF CHANNEL ERROR
00733  0 22 0 0040          534          SOV                        SET OVERFLOW
00734  0 0 21 01241         535          EXU     RDIS               STOP TAPE
00735  0 0 53 01451         536          SKN     SPF                IOSP INPUT FLAG
00736  0 0 01 00756         537          BRU     IN3                RESET
00737  0 0 16 01703         538          LDA     =033120252         SET, GET BLOCK NO. 2
00740  0 0 14 01444         539          LDB     BUFFER+64          END ADDRESS EXPECTED
00741  0 0 03 01055         540          BRM     CHECK              CHECK DATA INPUT
                            541 *                                   IF CORRECT CONTINUE.
00742  0 0 03 01177         542          BRM     STARTP             START TAPE
00743  0 22 0 4000          543          ROV
00744  0 0 21 01243         544          EXU     RALC               ALERT
00745  0 0 21 01216         545          LCH     RIOSP1             LOAD IOSP BUFFER,32
00746  0 0 31 01217
00747  1 17 01645           546          LDX     =-3**0177777      SET UP ERROR MESSAGE
00750  0 0 14 01704         547          LDB     =ERMSG8
```

Table 4-6. 9300 Computer, Extended Mode I/O Test Program (Sheet 13 of 20)

```
00751  0 0 16 00647          548          LDA     RCATC
00752  0 0 03 00610          549          BRM     WCZ                 GO WAIT FOR C=0
00753  0 0 21 01236          550          EXU     RCET                IF CHANNEL ERROR
00754  0 22 0 0040           551          SOV                         SET OVERFLOW
00755  0 0 21 01234          552          EXU     RCAT                IS READER STILL RUNNING
00756  0 0 01 00760          553          BRU     IN5                 YES
00757  0 0 21 01240          554          EXU     RPT                 NO. RESTART TAPE READER
00760  0 0 21 01243          555 IN5      EXU     RALC
00761  0 0 21 01220          556          LCH     RIORP               LOAD IORD BUFFER+32,33
00762  0 0 31 01221
00763  0 40 37711            557          CLR
00764  0 0 76 01451          558          STA     SPF                 R(IOSP INPUT)
00765  0 0 01 00732          559          BRU     IN4
                             560 *
00766  0 0 16 01735          561 IN3      LDA     =033120352          BLOCK NO. 3
00767  0 0 14 01731          562          LDB     =BUFFER+64          END ADDRESS EXPECTED
00770  0 0 03 01055          563          BRM     CHECK               GO CHECK DATA
00771  0 0 03 01177          564          BRM     STARTP              START TAPE
00772  0 0 21 01243          565          EXU     RALC
00773  0 0 21 01222          566          LCH     RIORD               LOAD IORD BUFFER,56
00774  0 0 31 01223
00775  0 0 21 01234          567          EXU     RCAT                CHAN. ACTIVE
00776  0 0 01 00775          568          BRU     $-1                 YES, WAIT FOR STOP
00777  1 17 01674            569          LDX     =-8**0177777        CHAN. INACTIVE
01000  0 0 16 01636          570          LDA     =077
01001  0 1 54 01444          571          SKA     BUFFER+64,X         CHECK FOR 0'S IN LAST 8 CHARACTERS
01002  0 0 01 01024          572          BRU     IN3A
01003  1 57 01001            573          BRX     $-2
01004  1 17 01674            574 IN3B     LDX     =-8**0177777        O.K. INSERT CORRECT 8 CHARACTERS
01005  0 0 16 01642          575          LDA     =070
01006  0 1 76 01444          576          STA     BUFFER+64,X
01007  0 0 05 01657          577          ADD     =1
01010  1 57 01006            578          BRX     $-2
01011  0 0 16 01736          579          LDA     =033120452          BLOCK NO. 4
01012  0 0 14 01737          580          LDB     =BUFFER+56          END ADDRESS EXPECTED
01013  0 22 0 4000           581          ROV
01014  0 0 03 01055          582          BRM     CHECK               GO CHECK DATA
01015  0 22 4 0040           583          BPT     1                   TEST STOP?
01016  0 0 01 00204          584          BRU     KYBD                YES
01017  0 22 4 0020           585          BPT     2                   TEST CYCLE?
01020  0 0 01 00356          586          BRU     OUT                 YES
01021  0 22 4 0010           587          BPT     3                   TEST ONE ONLY.
01022  0 0 01 00640          588          BRU     IN                  READ
01023  0 0 01 00356          589          BRU     OUT                 PUNCH
                             590 *
01024  0 22 4 0004           591 IN3A     BPT     4                   ERROR STOP PERMITTED
01025  0 0 01 01004          592          BRU     IN3B                NO
01026  1 17 01674            593          LDX     =-8**0177777        FORMAT LAST EIGHT CHARACTERS FOR TYPE
```

Table 4-6. 9300 Computer, Extended Mode I/O Test Program (Sheet 14 of 20)

```
01027  0 40 37711          594          CLR
01030  0 1 16 01444        595 IN3D     LDA     BUFFER+64,X
01031  0 60 04 003         596          LSH     3
01032  0 1 13 01444        597          MRG     BUFFER+64,X
01033  0 0 11 01710        598          ETR     =0707
01034  0 0 13 01711        599          MRG     =052120000
01035  0 60 04 006         600          LSH     6
01036  0 1 76 01055        601          STA     MSGIMG+8,X
01037  1 57 01030          602          BRX     IN3D
01040  1 17 01712          603          LDX     =-19**0177777       OUTPUT ERROR MESSAGE
01041  0 02 0 02641        604          TYP     0,1,4
01042  1 30 01616          605          MIB     ERMSG9+19,X
01043  1 57 01042          606          BRX     $-1
01044  0 02 14000          607          TOP     0
01045  0 20 14000          608          CAT     0
01046  0 0 01 01045        609          BRU     $-1
01047  0 02 0 02041        610          TYP     0,1,1               OUTPUT 8 CHARACTERS
01050  1 17 01674          611          LDX     =-8**0177777
01051  1 30 01065          612          MIB     MSGIMG+8,X
01052  1 57 01051          613          BRX     $-1
01053  0 30 01503          614          MIB     ERMSG1+3            CR
01054  0 0 01 00412        615          BRU     GOTOP
                           616 *
                           617 *
01055                      618 MSGIMG   RES     8
                           619          PAGE
                           620 *
                           621 *  CHECK INPUT DATA SUBROUTINE.
                           622 *
01065  0 0 00 00000        623 CHECK    PZE
01066  0 0 76 01626        624          STA     ERMSG0+6            SAVE BLOCK NO.
01067  0 0 21 01236        625          EXU     RCET                CHECK FOR ERROR
01070  0 0 01 01141        626          BRU     PARERR              GO TO PARITY ERROR ROUTINE
01071  0 22 1 4040         627          OVT                         CHECK FOR PREVIOUSLY NOTED ERROR
01072  0 0 01 01141        628          BRU     PARERR              GO TO PARITY ERROR ROUTINE
01073  0 0 21 01242        629          EXU     RASC                STORE CHANNEL ADDRESS
01074  0 0 33 01444        630          PIN     T1
01075  0 0 74 01445        631          STB     T1+1                SAVE EXPECTED
01076  0 0 16 01444        632          LDA     T1
01077  0 0 12 01445        633          EOR     T1+1                COMPARE ACTUAL WITH EXPECTED
01100  0 0 54 01670        634          SKA     =-1                 AGREE
01101  0 0 01 01154        635          BRU     PINERR              NO
01102  1 17 01660          636 CHECK2   LDX     =-64**0177777       YES
01103  0 0 16 01675        637          LDA     =00
01104  0 0 14 01636        638          LDB     =077
01105  0 1 55 01444        639          SKM     BUFFER+64,X         CHECK INPUT BUFFER
01106  0 0 01 01112        640          BRU     CHECK1              ERROR
01107  0 0 05 01657        641          ADD     =1
01110  1 57 01105          642          BRX     $-3
```

Table 4-6. 9300 Computer, Extended Mode I/O Test Program (Sheet 15 of 20)

```
01111  0 0 41 01055      643          BRR     CHECK              EXIT IF ALL CORRECT
                         644 *
01112  0 22 4 0004       645 CHECK1   BPT     4                  ERROR STOP PERMITTED?
01113  0 0 41 01055      646          BRR     CHECK              NO, EXIT
01114  0 0 76 01444      647          STA     T1                 YES
01115  0 60 04 003       648          LSH     3                  FORMAT EXPECTED
01116  0 0 13 01444      649          MRG     T1
01117  0 0 11 01710      650          ETR     =0707
01120  0 60 04 005       651          LSH     6
01121  0 0 13 01713      652          MRG     =012000052
01122  0 0 76 01631      653          STA     ERMSG0+9           STORE EXPECTED
01123  0 1 16 01444      654          LDA     BUFFER+64,X        FORMAT RECEIVED
01124  0 60 00 003       655          RSH     3
01125  0 1 16 01444      656          LDA     BUFFER+64,X
01126  0 60 04 003       657          LSH     3
01127  0 0 11 01710      658          ETR     =0707
01130  0 60 04 005       659          LSH     6
01131  0 0 13 01713      660          MRG     =012000052
01132  0 0 76 01634      661          STA     ERMSG0+12          STORE RECEIVED
01133  1 17 01676        662          LDX     =-13**0177777
01134  0 0 21 01241      663          EXU     RDIS               DISCONNECT READER CHANNEL
01135  0 02 0 02641      664          TYP     0,1,4
01136  1 30 01635        665          MIB     ERMSG0+13,X
01137  1 57 01136        666          BRX     $-1
01140  0 0 01 00412      667          BRU     GOTOP
                         668 *
                         669 *  PARITY ERROR SUBROUTINE
                         670 *
01141  0 22 4 0004       671 PARERR   BPT     4                  ERROR STOP PERMITTED?
01142  0 0 41 01055      672          BRR     CHECK              NO
01143  0 0 21 01241      673          EXU     RDIS               YES, DISCONNECT READER CHANNEL
01144  0 02 0 02641      674          TYP     0,1,4
01145  1 17 01714        675          LDX     =-9**0177777
01146  1 30 01627        676          MIB     ERMSGP+9,X         OUTPUT PARITY ERROR MESSAGE
01147  1 57 01146        677          BRX     $-1
01150  0 02 14000        678          TOP     0
01151  0 20 14000        679          CAT     0
01152  0 0 01 01151      680          BRU     $-1
01153  0 0 01 01102      681          BRU     CHECK2             RETURN TO CHECK NUMBERS
                         682 *
                         683 *   PIN ADDRESS ERROR SUBROUTINE
                         684 *
01154  0 22 4 0004       685 PINERR   BPT     4                  ERROR STOP PERMITTED
01155  0 0 01 01102      686          BRU     CHECK2             NO
01156  0 0 16 01444      687          LDA     T1                 YES
01157  0 0 03 00537      688          BRM     MKOCT              EXPAND ACTUAL TO BCD
01160  0 0 76 00635      689          STA     OTPNM2             SAVE
01161  0 0 74 00636      690          STB     OTPNM2+1
```

Table 4-6. 9300 Computer, Extended Mode I/O Test Program (Sheet 16 of 20)

```
   01162  0 0 16 01445      691          LDA     T1+1                EXPAND EXPECTED TO BCD
   01163  0 0 03 00537      692          BRM     MKOCT
   01164  0 0 76 00577      693          STA     OTPNM1              SAVE
   01165  0 0 74 00600      694          STB     OTPNM1+1
   01166  0 0 21 01241      695          EXU     RDIS                DISCONNECT READER
   01167  0 02 0 02641      696          TYP     0,1,4
   01170  1 17 01672        697          LDX     =-15**0177777
   01171  1 30 00574        698          MIB     OTPNM+15,X          OUTPUT GENERAL MESSAGE
   01172  1 57 01171        699          BRX     $-1
   01173  0 30 01624        700          MIB     ERMSGO+4            OUTPUT BLOCK NO.
   01174  0 30 01625        701          MIB     ERMSGO+5
   01175  0 30 01626        702          MIB     ERMSGO+6
   01176  0 0 01 00533      703          BRU     OTPIN2              GO OUTPUT RECEIVED AND EXPECTED
                            704 *
                            705 *  START TAPE READER SUBROUTINE
                            706 *
   01177  0 0 00 00000      707 STARTP   PZE
   01200  1 17 01660        708          LDX     =-64**0177777
   01201  0 40 37711        709          CLR
   01202  0 1 76 01444      710          STA     BUFFER+64,X         CLEAR BUFFER
   01203  1 57 01202        711          BRX     $-1
   01204  0 0 21 01240      712          EXU     RPT                 START TAPE
   01205  0 0 41 01177      713          BRR     STARTP              EXIT
                            714          PAGE
                            715 *
                            716 *  I/O CHANNEL COMMANDS
                            717 *
R  01206  002 146 0 00      718 PIOSP    IOSP    IMAGE,64
   01207  0100 01244
R  01210  002 142 0 00      719 PIOSD    IOSD    IMAGE,64
   01211  0100 01244
                            720 *
R  01212  002 142 0 00      721 RIOSD    IOSD    BUFFER,64
   01213  0100 01344
R  01214  002 146 0 00      722 RIOSP    IOSP    BUFFER,65
   01215  0101 01344
R  01216  002 146 0 00      723 RIOSP1   IOSP    BUFFER,32
   01217  0040 01344
R  01220  002 144 0 00      724 RIORP    IORP    BUFFER+32,33
   01221  0041 01404
R  01222  002 140 0 00      725 RIORD    IORD    BUFFER,56
   01223  0070 01344
                            726 *
                            727 *
                            728 *  I/O CHANNEL INSTRUCTIONS.
                            729 *
   01224  0 20 14000        730 PCAT     CAT     0
   01225  0 20 12000        731 PCZT     CZT     0
```

Table 4-6. 9300 Computer, Extended Mode I/O Test Program (Sheet 17 of 20)

```
01226  0 20 11000        732 PCET   CET     0
                         733 *
01227  0 02 0 02044      734 PPT    PPT     0,1,1
01230  0 02 0 00044      735 PTL    PTL     0,1,1
01231  0 02 00000        736 PDIS   DSC     0
01232  0 02 12000        737 PASC   ASC     0
01233  0 02 50000        738 PALC   ALC     0
                         739 *
                         740 *
01234  0 20 14000        741 RCAT   CAT     0
01235  0 20 12000        742 RCZT   CZT     0
01236  0 20 11000        743 RCET   CET     0
01237  0 20 10400        744 RCIT   CIT     0
                         745 *
01240  0 02 0 02004      746 RPT    RPT     0,1,1
01241  0 02 00000        747 RDIS   DSC     0
01242  0 02 12000        748 RASC   ASC     0
01243  0 02 50000        749 RALC   ALC     0
                         750 *
                         751 *
                         752 *  OUTPUT IMAGE AREA, INPUT BUFFER AREA
                         753 *
01244                    754 IMAGE  RES     64
01344                    755 BUFFER RES     64
                         756 *
                         757 *
                         758 *  TEMPORARY STORAGE AND FLAGS
                         759 *
01444                    760 T1     RES     13
01461                    761 SPF    RES     1                    IOSP INPUT FLAG
01462                    762 PRF    RES     1                    PUNCH REPEAT FLAG
                         763        PAGE
                         764 *
                         765 *  ERROR AND STATUS MESSAGES.
                         766 *
01463  52233021          767 DISMSG BCD     52,!CHANNEL ERROROUSLY DISCONNECTED BEFORE C=0, DURING
01464  45452543
01465  12255151
01466  46514664
01467  62437012
01470  24316223
01471  46454525
01472  23632524
01473  12222526
01474  46512512
01475  23130073
01476  12246451
01477  31452712
```

Table 4-6. 9300 Computer, Extended Mode I/O Test Program (Sheet 18 of 20)

```
01500  31466247          768 ERMSG1 BCD     16,IOSP, OUTPUT. !!
01501  73124664
01502  63476463
01503  33125252
01504  31466224          769 ERMSG2 BCD     16,IOSD, OUTPUT. !!
01505  73124664
01506  63476463
01507  33125252
01510  52233021          770 ERMSG4 BCD     52,!CHANNEL DID NOT DISCONNECT WHEN C=0 ON IOSD INPUT!
01511  45452543
01512  12243124
01513  12454663
01514  12243162
01515  23464545
01516  25236312
01517  66302545
01520  12231300
01521  12464512
01522  31466224
01523  12314547
01524  64635212
01525  31466224          771 ERMSG5 BCD     12,IOSD, INPUT!
01526  73123145
01527  47646352
01530  52233021          772 ERMSG6 BCD     52,!CHANNEL DISCONNECTED DURING IOSP INPUT, CIT NEVER
01531  45452543
01532  12243162
01533  23464545
01534  25236325
01535  24122464
01536  51314527
01537  12314662
01540  47123145
01541  47646373
01542  12233163
01543  12452565
01544  25511212
01545  63516425          773        BCD     8,TRUE. !
01546  33125212
01547  52246451          774 ERMSG7 BCD     48,!DURING IOSP INPUT C=0 INDICATING EOR PAST BUT C
01550  31452712
01551  31466247
01552  12314547
01553  64631223
01554  13001231
01555  45243123
01556  21633145
01557  27122546
01560  51124721
```

Table 4-6. 9300 Computer, Extended Mode I/O Test Program (Sheet 19 of 20)

```
01561   62631222
01562   64631223
01563   31631266          775          BCD      20,IT WAS NEVER TRUE. !
01564   21621245
01565   25652551
01566   12635164
01567   25331252
01570   31466247          776 ERMSG8   BCD      12,I9SP, INPUT!
01571   73123145
01572   47646352
01573   52314651          777 ERMSG9   BCD      52,!I9RD ON INPUT DID NOT IGNORE THE LAST 8 CHARACTERS,
01574   24124645
01575   12314547
01576   64631224
01577   31241245
01600   46631231
01601   27454651
01602   25126330
01603   25124321
01604   62631210
01605   12233021
01606   51212363
01607   25516273
01610   12226463          778          BCD      24, BUT READ THE FOLLOWING!
01611   12512521
01612   24126330
01613   25122646
01614   43434666
01615   31452752
01616   52524721          779 ERMSGP   BCD      8,!!PARITY
01617   51316370
01620   52314547          780 ERMSGO   BCD      40,!INPUT ERROR IN BLOCK NO. N!EXPECTED DD!
01621   64631225
01622   51514651
01623   12314512
01624   22434623
01625   42124546
01626   33124552
01627   25674725
01630   23632524
01631   12242452
01632   51252325          781          BCD      12,RECEIVED DD!
01633   31652524
01634   12242452
                          782 *
01635   0 30 00000        783 MIBX     MIB      0                    OUTPUT INSTRUCTION
                          784 *
                          785 *
```

Table 4-6. 9300 Computer, Extended Mode I/O Test Program (Sheet 20 of 20)

```
                00000200        786         END     BEGIN
01636           00000077
01637           00606047
01640           00606051
01641           00606062
01642           00000070
01643           00177774
01644           50277677
01645           00177775
01646           57737677
01647           50277777
01650           77777776
01651           00002000
01652           00177766
01653           70277777
01654           00000004
01655           00000003
01656           00040000
01657           00000001
01660           00177700
01661           01000000
01662           00001500
01663           52121225
01664           51514651
01665           12246451
01666           31452712
01667           00001504
01670           77777777
01671           00001344
01672           00177761
01673           00177764
01674           00177770
01675           00000000
01676           00177763
01677           00001525
01700           33120152
01701           00001444
01702           00177757
01703           33120252
01704           00001570
01705           33120352
01706           33120452
01707           00001434
01710           00000707
01711           52120000
01712           00177755
01713           12000052
01714           00177767
```

SECTION V
TROUBLESHOOTING

5.1 GENERAL

5.2 This section contains information useful when troubleshooting the Model 932XX series TMCCs.

5.3 Troubleshooting information contained herein is based on the test programs given in Section 4 of this manual. When an error is indicated during performance of the tests given in Section 4, reference should first be made to the Programming Flow Charts illustrated in figure 5-1 and then to the applicable referenced data.

5.4 TEST PROGRAM FLOW CHART

5.5 Figure 5-1 illustrates the programming flow data for the extended mode test programs given in Section 4. An example of the usage of the flow charts is given in the following paragraphs.

5.6 FLOW CHART EXAMPLE

5.7 In presenting the example of usage of the flow charts, the following points will be assumed:

a. Paper tape reader connected to one of the interlaced channels.

b. Breakpoint 1 switch reset.

c. Breakpoint 2 switch reset.

d. Breakpoint 3 switch set.

e. Breakpoint 4 switch reset.

f. An error exists in block 4.

5.8 At the initialization of the test, the channel number has been inserted on the typewriter, the unit number being used, and the character "R" for the paper tape reader. The program begins at the top of sheet 1 of figure 5-1. The program initializes restart location, disconnects all channels, addresses the keyboard and reads the character typed. As the character typed is an "R", the flow proceeds to the right from CHAR: R to = R and is picked up again on sheet 2. The program then builds channel and unit mask words, and builds: RPT, RCAT, RCET, RCZT, RCIT, RALC, and RDIS (Read Paper Tape, Channel Active Test, Channel Error Test, Channel Zero Count Test, Channel Inter-Record Test, Alert Channel, and Disconnect Channel, respectively). The EOM/EOD commands are then constructed and the keyboard addressed to determine if the letter "S" has been inserted to start the test. The program returns to sheet 1, KYBD, where the keyboard is addressed, the character "S" is read and Breakpoint Switch 3 is interrogated. As Breakpoint Switch 3 is set (paragraph 5.7d) the line S is followed to IN.

5.9 The program proceeds to sheet 8 (circle labeled IN), the tape is started, IOSD 64 is loaded (block 1), a check is made to determine if the count reaches zero and the channel is inactive. As the count has reached zero and the channel is not active, the program then proceeds to check the data as given on sheet 12. The subroutine is then performed to check End Address, Parity, and Input Data. The block number is then saved, no error exists, the channel address is stored and checked against the expected and the input data is compared. As the input data does compare, the program exits from the subroutine and is picked back up again on sheet 8 and proceeds to IN 1.

5.10 IN 1 continues on sheet 9, the tape is started again and IOSP 65 is loaded (block 2). The program checks that the word count does not reach zero and the inter-record test occurs (CIT). It then proceeds from CIT? to IN 2.

5.11 The program then checks to determine if an error exists (sheet 10) and stops the tape before the data is checked. While the tape is stopped, the data check subroutine is performed (sheet 12). After comparison of the data, block no. 2 is entered and the program exists from the subroutine and proceeds (sheet 10) to start the tape (sheet 13) and then loads IOSP 32 (block 3).

5.12 Subsequent to loading IOSP, the subroutine Wait For Count Zero (sheet 6) is again performed. When the count equals zero, the program exits from the subroutine and returns to the main program (sheet 10). As no error existed and the channel is not active, the tape is started again (sheet 13) and IORP 33 is loaded, SPF is reset, and the inter-record indicator (CIT, sheet 9) is turned on at the end of the record. The count should not reach zero and the channel should remain active. As no error exists (sheet 10), the tape is stopped and SPF is interrogated. SPF has been reset and the program then continues to IN 3 (sheet 11). The data is then checked (sheet 12) and as it does compare, the program exits from the subroutine, block no. 3 is entered, and the tape is started again (sheet 11). The program then loads IORD 56 (block 4), waits for the channel to be inactive and checks to determine if the channel ignored the last eight characters. As the last eight words were not ignored (paragraph 5.7f), an error exists and the program

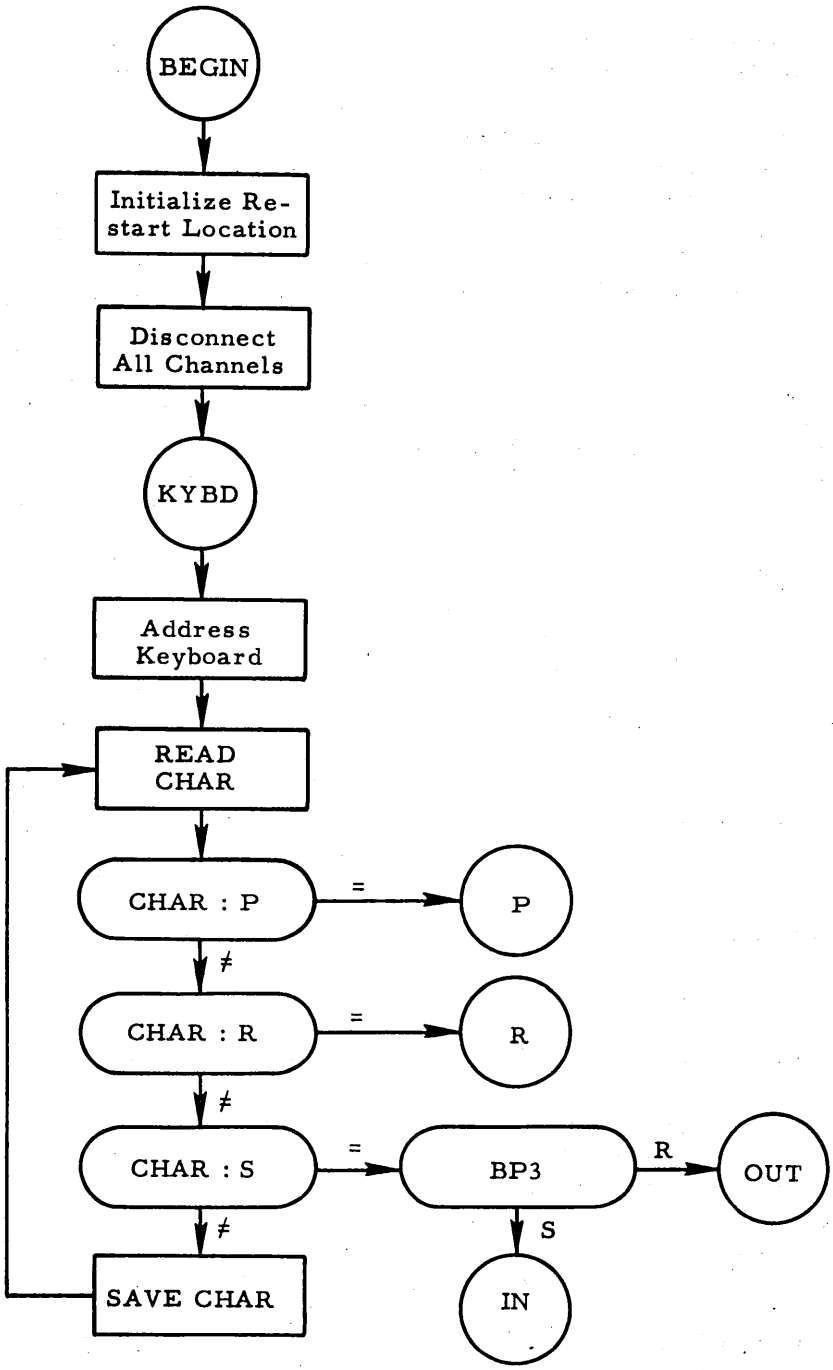

Figure 5-1. Test Program Flow Chart (Sheet 1 of 13)

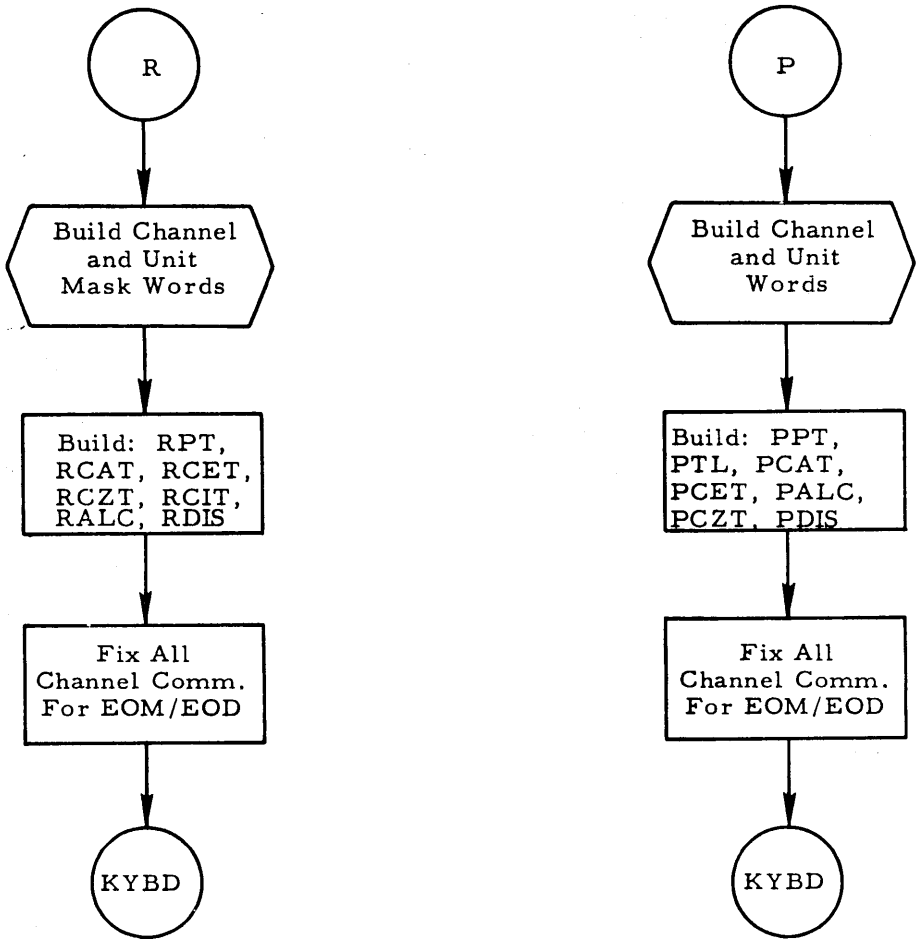

Figure 5-1. Test Program Flow Chart (Sheet 2 of 13)

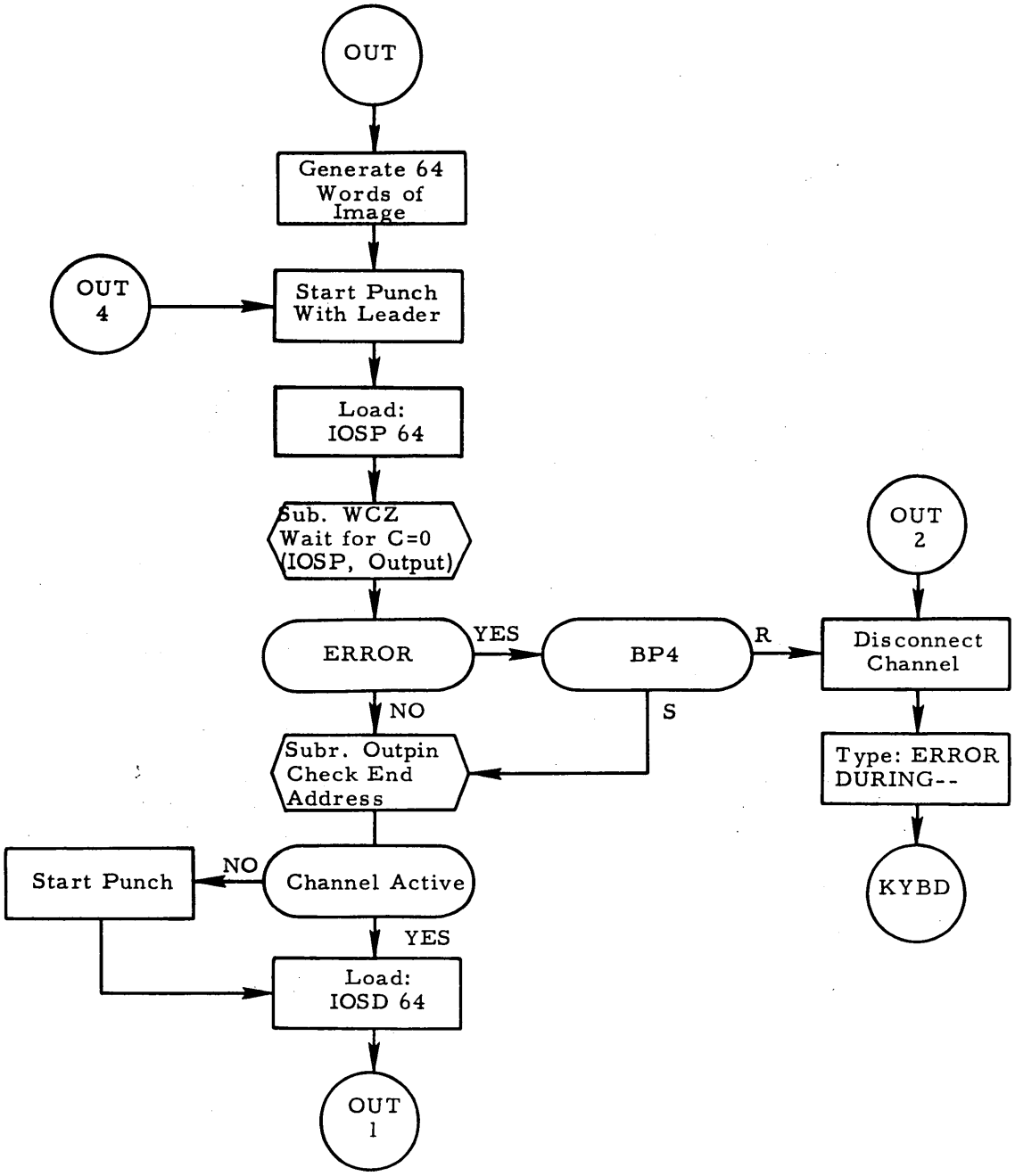

Figure 5-1. Test Program Flow Chart (Sheet 3 of 13)

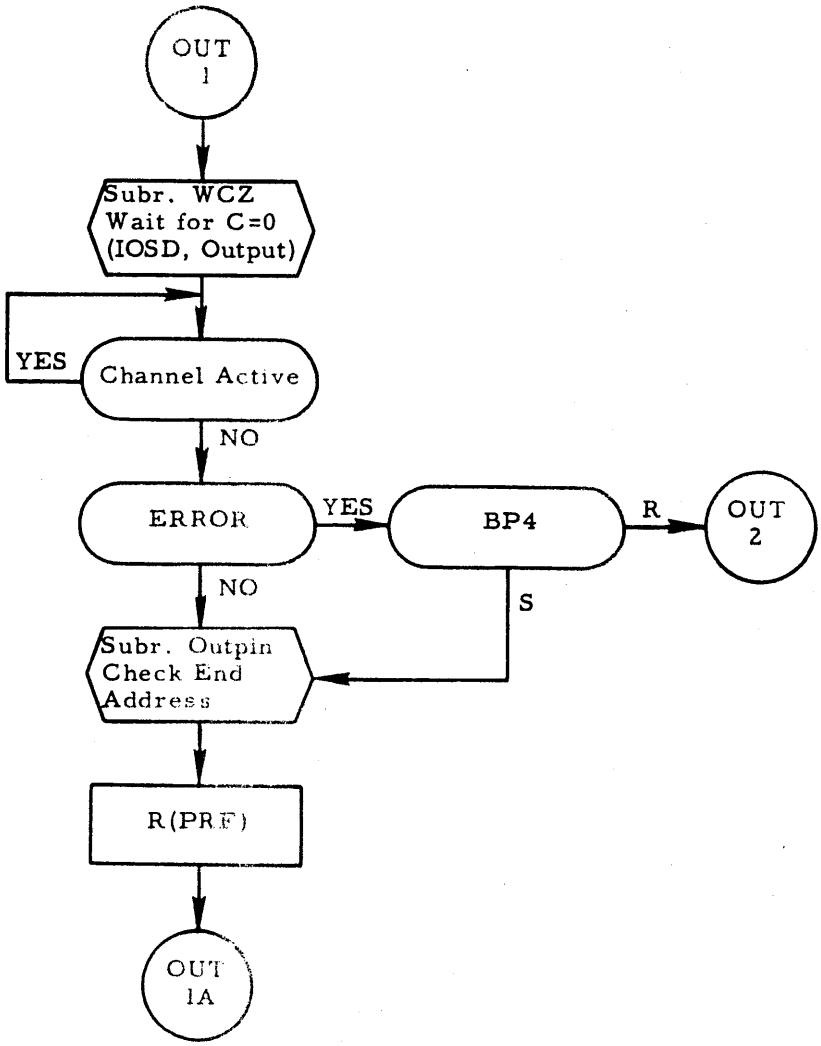

Figure 5-1. Test Program Flow Chart (Sheet 4 of 13)

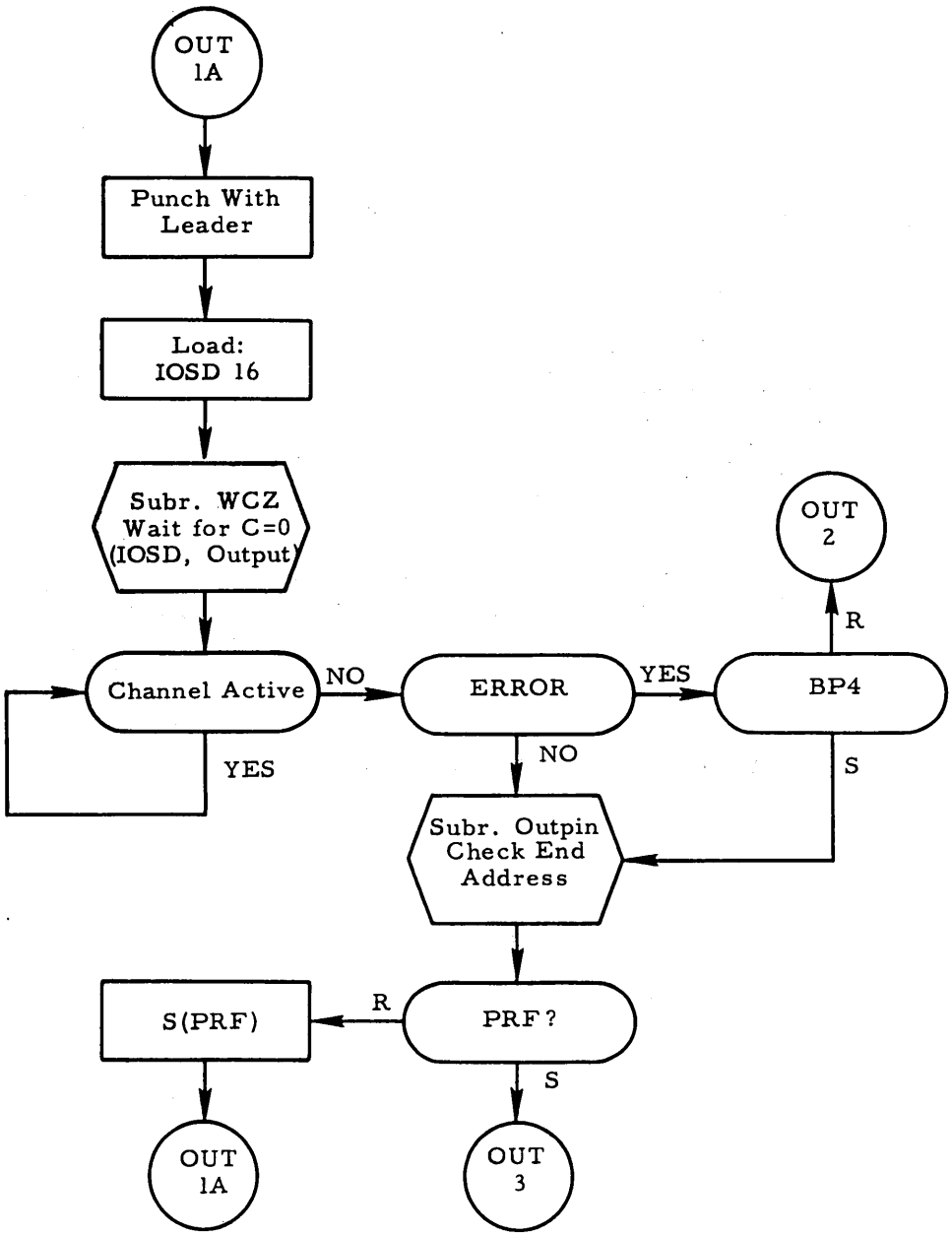

Figure 5-1. Test Program Flow Chart (Sheet 5 of 13)

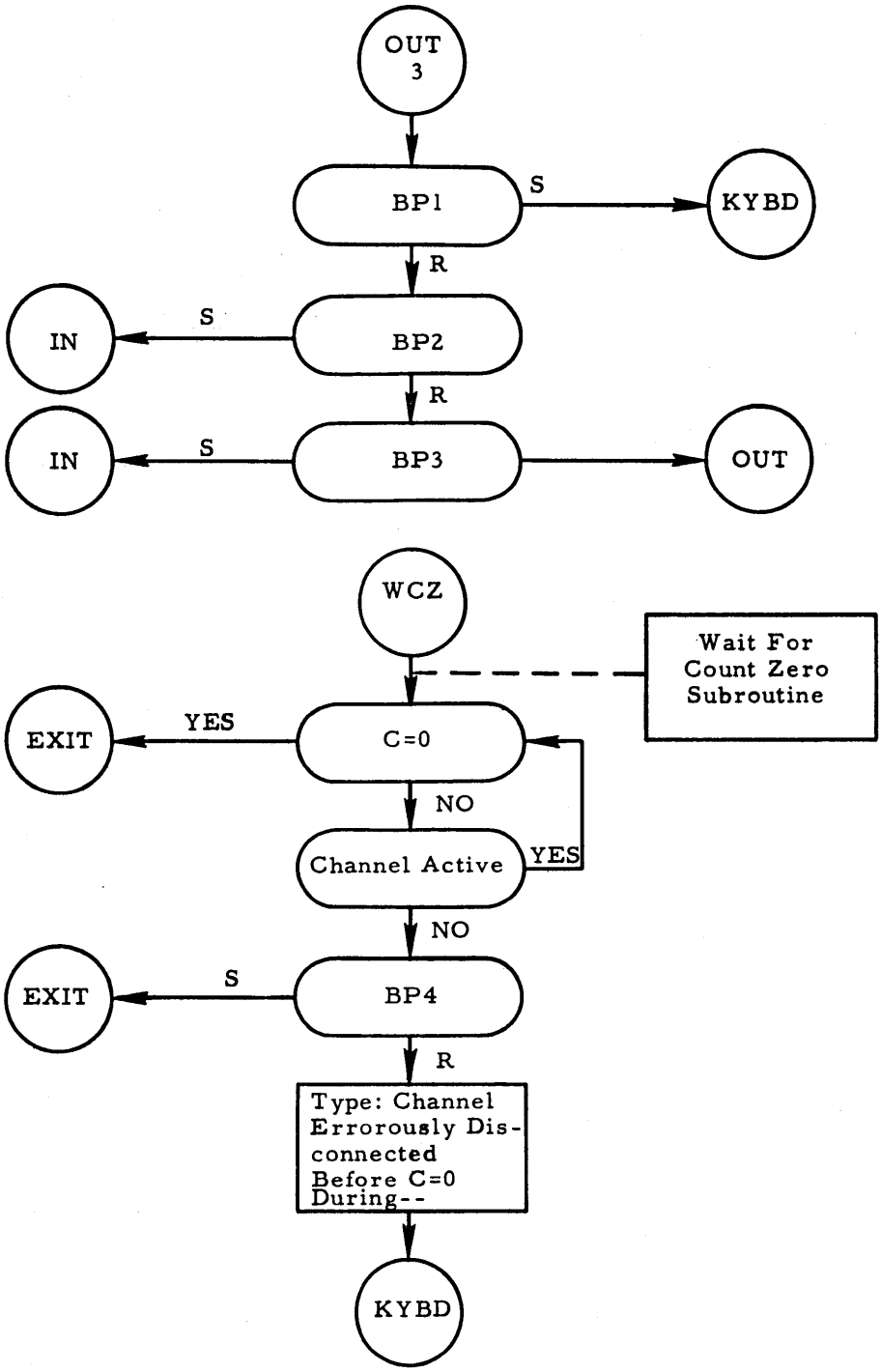

Figure 5-1. Test Program Flow Chart (Sheet 6 of 13)

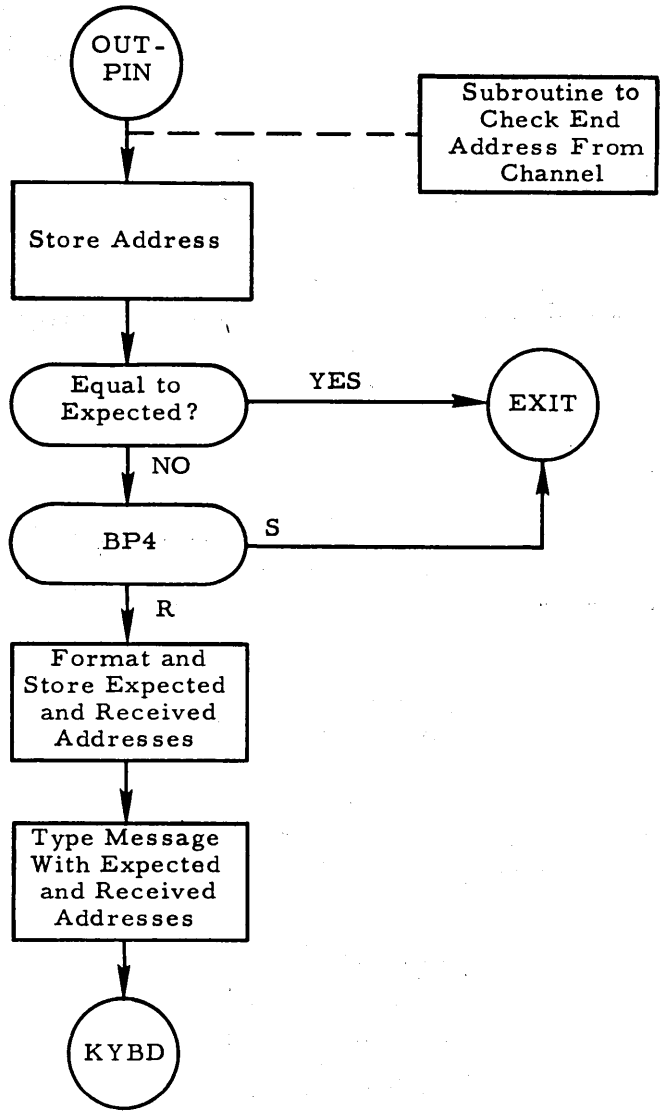

Figure 5-1. Test Program Flow Chart (Sheet 7 of 13)

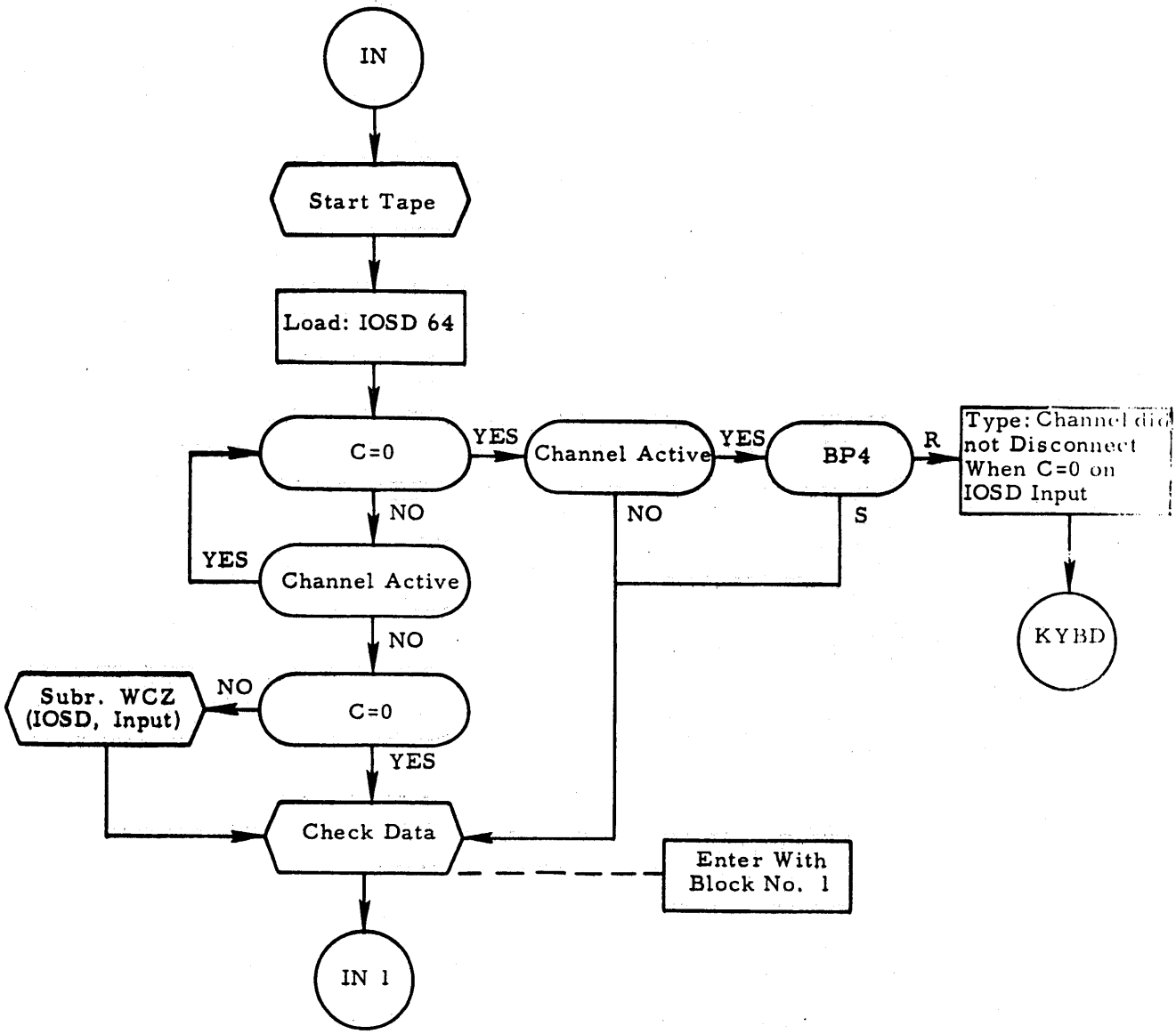

Figure 5-1. Test Program Flow Chart (Sheet 8 of 13)

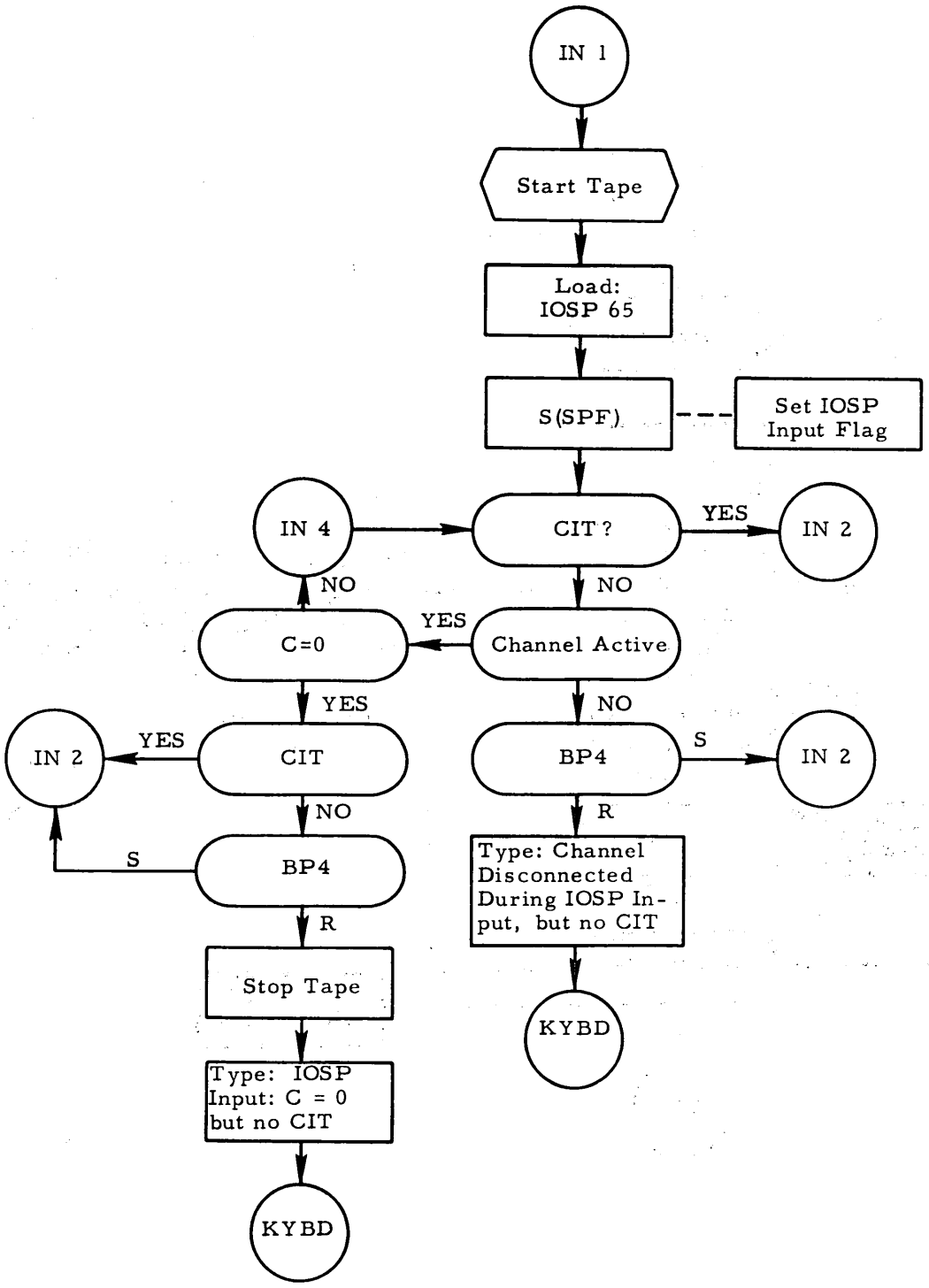

Figure 5-1. Test Program Flow Chart (Sheet 9 of 13)

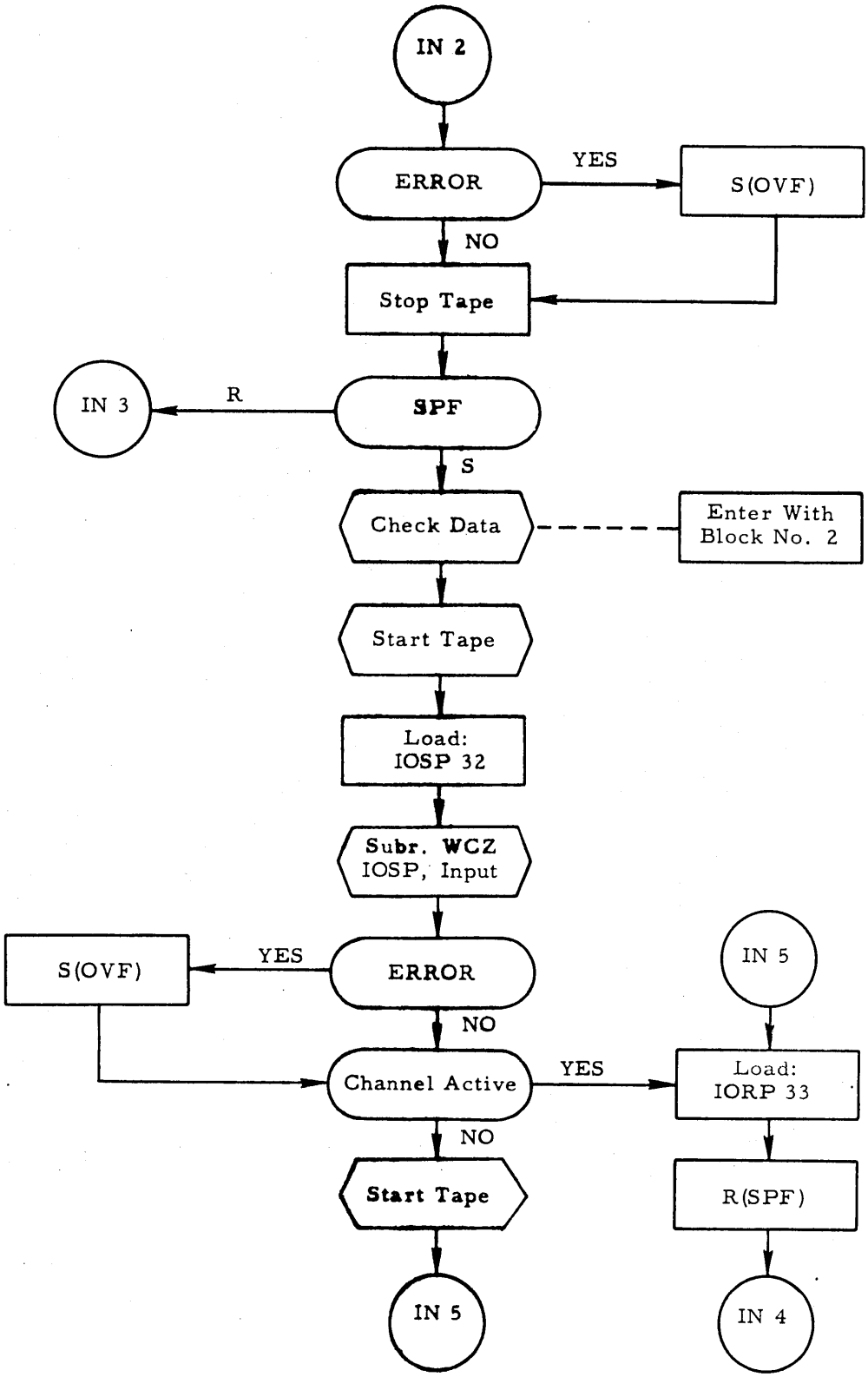

Figure 5-1. Test Program Flow Chart (Sheet 10 of 13)

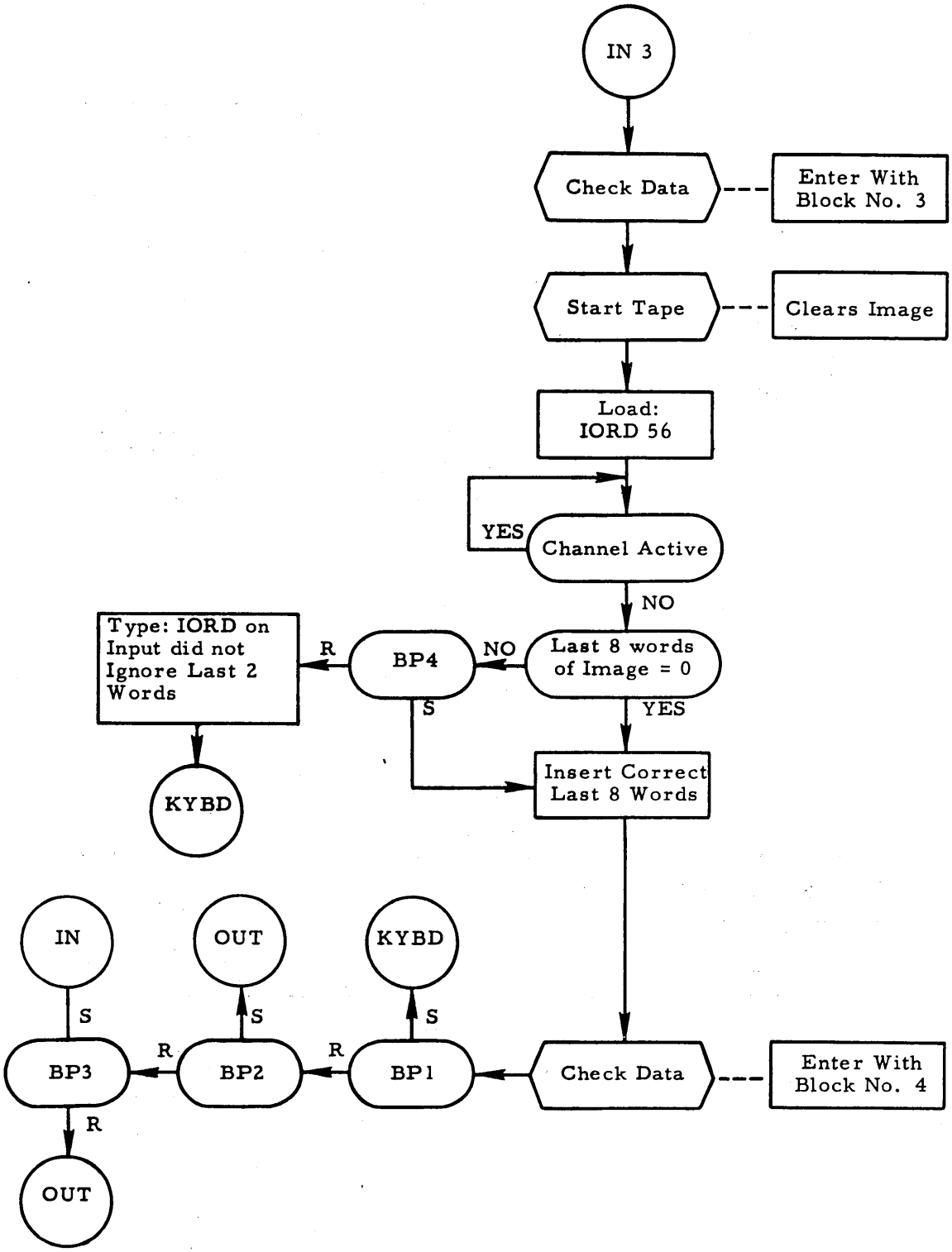

Figure 5-1. Test Program Flow Chart (Sheet 11 of 13)

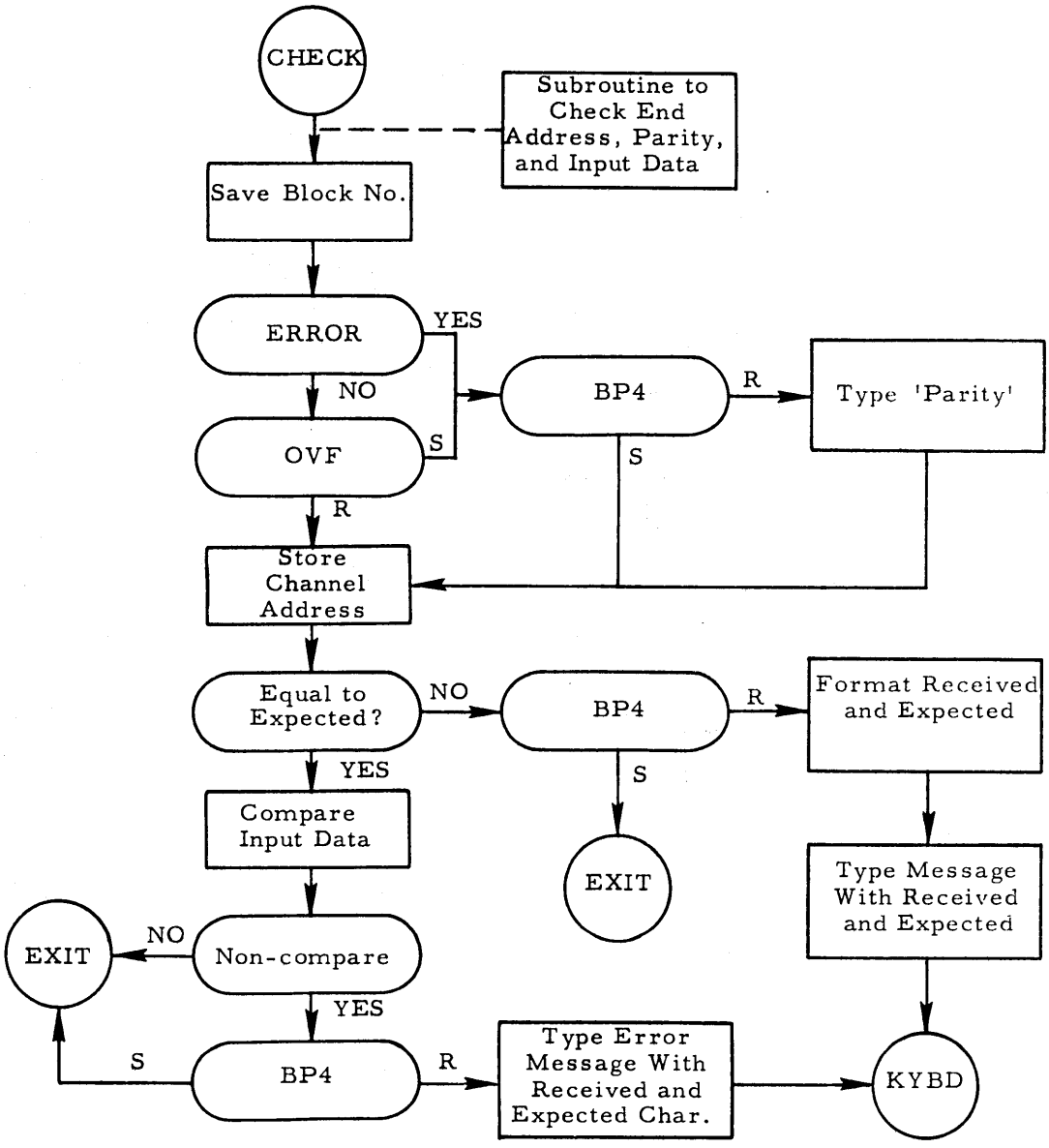

Figure 5-1. Test Program Flow Chart (Sheet 12 of 13)

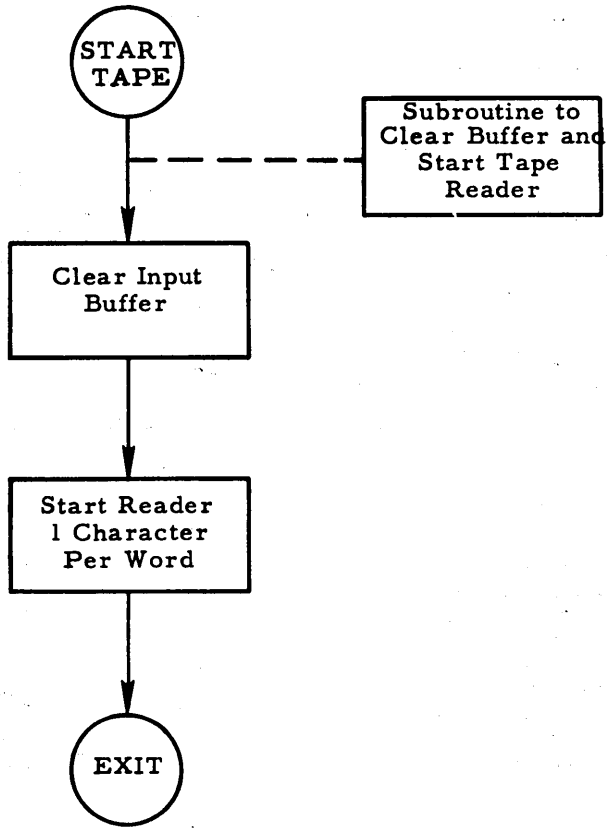

Figure 5-1. Test Program Flow Chart (Sheet 13 of 13)

interrogates Breakpoint Switch 4. Breakpoint Switch 4 is reset (paragraph 5.7e), therefore, the program types out: IORD on Input did not ignore last two words. Reference should then be made to table 5-8 for information concerning IORD on Input.

5.13 TROUBLESHOOTING INFORMATION

5.14 The error printout during the test program is determined by the type of device used with the program. If the device is an output device, the following type of error codes may be printed out:

a. Typewriter -- Error during IOSD output

b. Paper Tape -- Error during IORD/IOSD output

c. Cards -- Error during IOSD/IORD output

d. Printer -- Error during IOSD/IORD output

e. Magnetic Tape -- Error during IORD/IORP output.

5.15 If the device is an input device, the following types types of error codes may be printed out:

a. Typewriter -- Error during IOSD input

b. Paper Tape -- Error during IORD/IOSD/IORP input

c. Cards -- Error during IORD/IOSD input

d. Magnetic Tape -- Error during IORD/IORP input.

5.16 TROUBLESHOOTING

5.17 If a failure occurs during performance of the test program and an error message is printed out, determination must be made whether the malfunction is in the central processor unit (CPU), in the input/output device, or in the TMCC. Normally, this can be determined by performing a portion of the applicable test routine for the input/output device and checking for proper operation.

5.18 If the determination is made that the malfunction is in the TMCC, reference should then be made to the applicable table (tables 5-1 thru 5-10) for that function. The table describes the function and references the paragraphs in the Theory of Operation section (Section 3) where a detailed description of that function is described.

5.19 The logic equations pertaining to the particular function can be determined from the description in the theory of operations. A comparison of the logic equations and terms will indicate the particular terms peculiar to the function which has failed. Reference to the logic layout drawings (listed in Section 1) will indicate the module in which the term is used, the physical location of the module, and the terminal connections where the term can then be found.

5.20 Normal troubleshooting procedures can be performed to pinpoint the malfunction to a particular component or terminal.

5.21 Physical location of components and schematics of each module can be found in Section 6.

Table 5-1. IOSP Output Function, W (A) Channel

Iwg	Iwh	Iwi	Output Function	Sec. 3, Par. Ref.
1	1	1	1. I1w at Iwf if Iwk When the channel counts C down to zero (Iwf), the channel generates a zero word count interrupt (I1w), if armed (Iwk), indicating the program should reload the interlace portion of the channel to continue writing in the same record. Failure to reload the interlace before the buffer transmits all of the characters in its registers and before the peripheral device requests the next character from the buffer sets the channel error indicator.	3.152 thru 3.157

Table 5-2. IORP Output Function, W (A) Channel

Iwg	Iwh	Iwi	Output Function	Sec. 3, Par. Ref.
1	1	0	1. I1w at Iwf if Iwk 2. At Iwf, reset W0 3. I2w at Mtgw or Whs W11 if Iwj 4. At Whs W11, disconnect When the channel interlace counts C down to zero (Iwf), the channel generates a zero word count interrupt (I1w), if armed (Iwk), notifying the channel buffer that it has received the last word that is to be output. At zero word count (Iwf), the Halt Interlock flip-flop, W0, is reset to inhibit additional time-share requests. When the device receives the last word from the buffer, it sends an End-of-Record response (Whs W11) back to the buffer. If armed, (Iwj), the buffer generates an End-of-Record Interrupt (I2w) and sets the inter-record indicator. If the device is magnetic tape, an End-of-Record response (tape gap signal, Mtgw,) signal is sent to the buffer but the tape continues to move. If the program does not execute an EOM to write a new tape before the tape gap signal drops, the channel disconnects (Whs W11) and the tape stops.	3.144 thru 3.151

Table 5-3. IOSD Output Function, W (A) Channel

Iwg	Iwh	Iwi	Output Function	Sec. 3, Par. Ref.
1	0	1	1. I1w at Iwf if Iwk 2. At Iwf, reset W0 3. Disconnect at Iwf W11 or Whs 4. I2w at disconnect, if Iwj When the channel interlace counts C down to zero (Iwf), the channel generates a zero word count interrupt (I1w), if armed (Iwk), indicating the last character has been transmitted. At zero word count (Iwf), the Halt Interlock flip-flop (W0) is reset inhibiting additional time-share requests. For devices other than magnetic tape (W11), the Halt Detector flip-flop (Wh) is set on reaching zero word count (Iwf) when the last character has been clocked from the buffer. The Halt Detector also sets on occurrence of a Halt Signal (Whs). Setting of the Halt Detector initiates a buffer disconnect sequence. The Signal Complete flip-flop (Wcs) is set and if the End-of-Record Interrupt Enable (Iwj) has been previously armed, an End-of-Record Interrupt (I2w) is generated.	3.140 thru 3.143

Table 5-4. IORD Output Function, W (A) Channel

Iwg	Iwh	Iwi	Output Function	Sec. 3, Par. Ref.
1	0	0	1. I1w at Iwf if Iwk 2. At Iwf, reset W0 3. Disconnect at Whs 4. I2w at disconnect, if Iwj When the channel counts C down to zero (Iwf), the channel generates a zero word count interrupt (I1w), if armed (Iwk), indicating that the last characters have been transmitted. At zero word count (Iwf), the Halt Interlock flip-flop (W0) is reset inhibiting additional time-share requests. If Halt Signal (Whs) is received, the Halt Detector (Wh) is set and a disconnect occurs. The Signal Complete flip-flop (Wsc) is set and, if armed (Iwj), an End-of-Record Interrupt (I2w) is generated.	3.134 thru 3.139

Table 5-5. IOSP Input Function, W (A) Channel

Iwg	Iwh	Iwi	Input Function	Sec. 3, Par. Ref.
1	1	1	1. I1w at Iwf if Iwk 2. At Mtgw or Whs W11, flush and store last character(s) if Iwf 3. I2w at Mtgw or Whs W11 if Iwj 4. Disconnect at Whs W11 When the channel counts C down to zero (Iwf), the channel generates a zero word count interrupt (I1w), if armed (Iwk), indicating the program should reload the interlace portion of the channel to continue reading the record. If the End-of-Record (Mtg or Whs W11) occurs before zero word count (Iwf), the buffer is flushed and the completed word is stored in memory. If the End-of-Record Interrupt Enable (Iwj) has been armed, an End-of-Record interrupt (I2w) is generated when a tape gap (Mtgw) or halt signal (Whs) is detected from the device. For magnetic tape operation (W11), a new EOM may be given within one millisecond from the occurrence of I2w to permit the tape system to proceed to a new record. Failure to give an EOM results in the tape stopping and the buffer disconnecting.	3.176 thru 3.179

Table 5-6. IORP Input Function, W (A) Channel

Iwg	Iwh	Iwi	Input Function	Sec. 3, Par. Ref.
1	1	0	1. I1w at Iwf if Iwk 2. Inhibit rate errors if Iwf 3. At Mtgw or Whs W11, flush and store last character(s) if Iwf 4. I2w at Mtgw or Whs W11 if Iwj 5. Disconnect at Whs W11 When the channel counts C down to zero (Iwf), the channel generates a zero word count interrupt (I1w), if armed (Iwk), indicating the program should reload the interlace portion of the channel to continue reading the record. Additional characters entering the channel after zero word count are precessed into the W register. Parity and rate errors cannot occur after zero word count because of Iwf. Detection of magnetic tape gap (Mtgw) or a halt signal (Whs) sets the End-of-Record detector. If the End-of-Record detector is set before zero word count has occurred (Iwf), the buffer is flushed and the completed word is stored in memory. If the End-of-Record Interrupt Enable (Iwj) has been armed, an End-of-Record interrupt (I2w) occurs. Failure to reload the interlace within one millisecond of I2w results in the tape stopping and the buffer disconnecting.	3.168 thru 3.175

Table 5-7. IOSD Input Function, W (A) Channel

Iwg	Iwh	Iwi	Input Function	Sec. 3, Par. Ref.
1	0	1	1. I1w at Iwf if Iwk 2. At Whs, flush and store last character(s) if Iwf 3. Disconnect at Iwf W11 or Whs 4. I2w at disconnect if Iwj When the channel counts C down to zero (Iwf), the channel generates a zero word count interrupt (I1w), if armed (Iwk). Should an End-of-Record (Whs) occur before zero word count (Iwf) is established, any characters remaining in the W register are flushed and stored. The Halt Detector is now permitted to set by Iwf W11 or Whs W11 and the channel is disconnected. If the End-of-Record Interrupt Enable (Iwj) has been armed, an End-of-Record interrupt (I2w) occurs.	3.164 thru 3.167

Table 5-8. IORD Input Function, W (A) Channel

Iwg	Iwh	Iwi	Input Function	Sec. 3, Par. Ref.
1	0	0	1. I1w at Iwf if Iwk 2. Inhibit rate errors if Iwf 3. At Mtgw or Whs W11, flush and store last character(s) if Iwf 4. Disconnect at Whs 5. I2w at disconnect if Iwj When the channel counts C down to zero (Iwf), the channel generates a zero word count interrupt (I1w), if armed (Iwk). Parity and rate errors (We) are inhibited by Iwf after zero word count is established. Should an End-of-Record (Mtgw or Whs W11) occur before zero word count is established (Iwf), the End-of-Record detector is set and any characters remaining in the W register are flushed and stored. The Halt Detector (Wh) is permitted to set by Whs, the buffer is cleared and the channel disconnected. If the End-of-Record Interrupt Enable (Iwj) has been armed, an End-of-Record interrupt (2w) occurs.	3.158 thru 3.163

Table 5-9. Output Functions, Y Channel

Iyg	Iyh	Iyi	Output Function	Sec. 3, Par. Ref.
1	1	1	IOSP 1. I1y at Iyf if Iyk	3.152 thru 3.157
1	1	0	IORP 1. I1y at Iyf if Iyk 2. At Iyf, reset Y0 3. I2y at Mtgy or Yhs Y11 if Iyj 4. At Yhs Y11, disconnect	3.144 thru 3.151
1	0	1	IOSD 1. I1y at Iyf if Iyk 2. At Iyf, reset Y0 3. Disconnect at Iyf Y11 or Yhs 4. I2y at disconnect, if Iyj	3.140 thru 3.143
1	0	0	IORD 1. I1y at Iyf if Iyk 2. At Iyf, reset Y0 3. Disconnect at Yhs 4. I2y at disconnect, if Iyj	3.134 thru 3.139
			The output functions for the Y channel are identical to those of the W channel given in tables 5-1, 5-2, 5-3, and 5-4. The only difference is the substitution of the letter "y" for "w" in the logic terms.	

Table 5-10. Input Functions, Y Channel

Iyg	Iyh	Iyi	Input Functions	Sec. 3, Par. Ref.
1	1	1	IOSP 1. I1y at Iyf if Iyk 2. At Mtgy or Yhs Y11, flush and store last character(s) if Iyf 3. I2y at Mtgy or Yhs Y11 if Iyj 4. Disconnect at Yhs Y11	3.176 thru 3.179
1	1	0	IORP 1. I1y at Iyf if Iyk 2. Inhibit rate errors if Iyf 3. At Mtgy or Yhs Y11, flush and store last character(s) if Iyf 4. I2y at Mtgy or Yhs Y11 if Iyj 5. Disconnect at Yhs Y11	3.168 thru 3.175
1	0	1	IOSD 1. I1y at Iyf if Iyk 2. At Yhs, flush and store last character(s) if Iyf 3. Disconnect at Iyf Y11 or Yhs 4. I2y at disconnect if Iyj	3.164 thru 3.167
1	0	0	IORD 1. I1y at Iyf if Iyk 2. Inhibit rate errors if Iyf 3. At Mtgy or Yhs Y11, flush and store last character(s) if Iyf 4. Disconnect at Yhs 5. I2y at disconnect if Iyj	3.158 thru 3.163
			The input functions for the Y channel are identical to those of the W channel given in tables 5-5, 5-6, 5-7, and 5-8. The only difference is the substitution of the letter "y" for "w" in the logic terms.	

SECTION VI
DRAWINGS

6.1 GENERAL

6.2 This section contains drawings useful when troubleshooting and maintaining the TMCC.

6.3 SCOPE OF SECTION

6.4 Included in this section are assembly drawings, schematic diagrams, and material lists for each module.

6.5 The type and quantity of each module are listed in Section 1, table 1-4. Physical location of each module is illustrated in Section 4, figure 4-4.

6.6 Also included in this section is the Semiconductor Cross Reference which provides a cross-reference between Scientific Data Systems semiconductor numbers, commercial Electronic Industries Association (EIA) numbers, specification numbers, and replacements for obsolete semiconductors.

103655 A

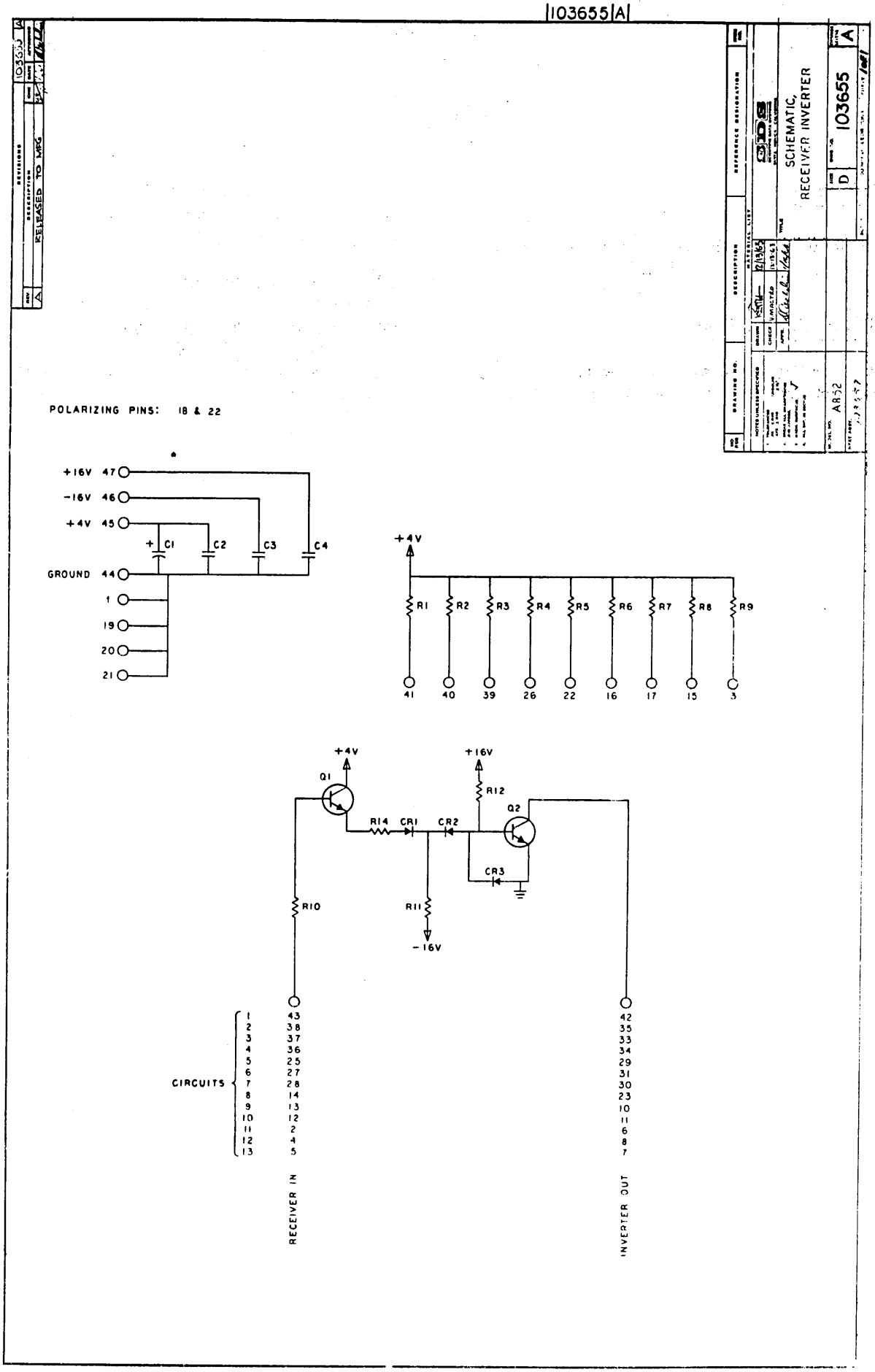

SCHEMATIC,
RECEIVER INVERTER
103655
D
A
A852
RELEASED TO MFG
POLARIZING PINS: 18 & 22
+16V 47
-16V 46
+4V 45
GROUND 44
1
19
20
21
C1
C2
C3
C4
+4V
R1
R2
R3
R4
R5
R6
R7
R8
R9
41
40
39
26
22
16
17
15
3
+4V
Q1
+16V
R12
Q2
R14
CR1
CR2
CR3
R10
R11
-16V
CIRCUITS
1 43 42
2 38 35
3 37 33
4 36 34
5 25 29
6 27 31
7 28 30
8 14 23
9 13 10
10 12 11
11 2 6
12 4 8
13 5 7
RECEIVER IN
INVERTER OUT

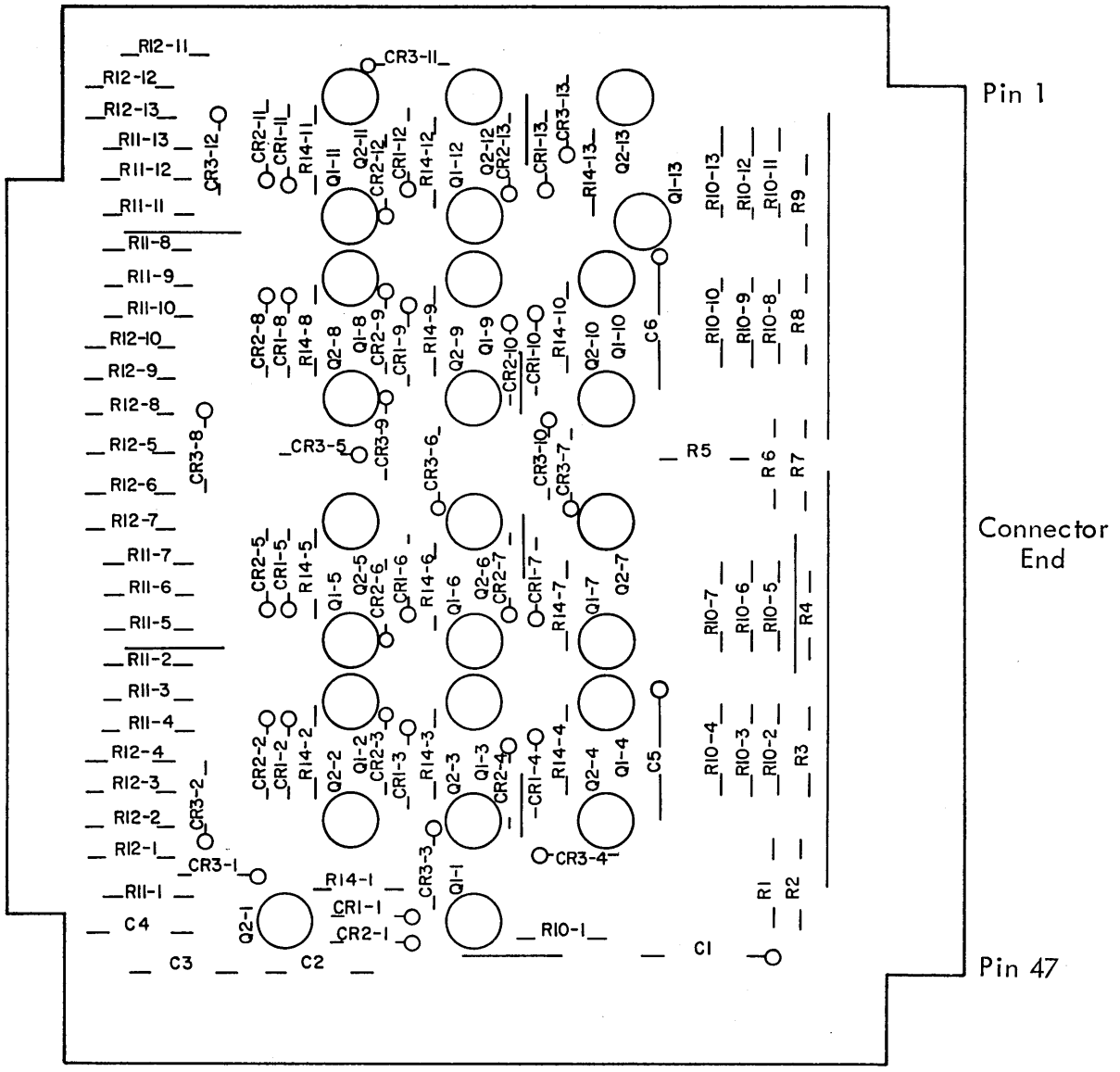

Receiver Inverter AB52
103657C

REV A

DWG. NO. 103657

ML

MATERIAL LIST
DWG. TITLE

SDS SCIENTIFIC DATA SYSTEMS

ML | DWG. NO. 103657 | REV A

ASSY, P.W. RECEIVER INVERTER MOD # AB52 DATE 1/2/4 SHEET 2 OF 2

ITEM	DWG. TITLE	DWG. NO.	NO. REQ	REMARKS OR CKT. DESIG.
1	Board, Printed Wiring	103656	1	
2	Handle, Circuit Card	100016	1	
3	Eyelet, Tubular	103896-016	2	
4	Strip, Marker	100197	1	
5	Contact, Conn Upper	100097	23	
6	Contact, Conn Lower	100098	24	
7	Transistor (SDS 216)	103242	26	Q1, 2
8	Diode (SDS 103)	100091	39	CR1, 2, 3
9				
10	Capacitor, Mylar	100308-103	3	C2, 3, 4
11	Capacitor, Tantalum	100312-156	1	C1
12	Resistor, ½ watt	100111-680	13	R14
13	Resistor, ½ watt	100111-151	9	R1 thru R9
14	Resistor, ½ watt	100111-221	13	R10
15	Resistor, ½ watt	100111-122	13	R11
16	Resistor, ½ watt	100111-272	13	R12
17	Wire, Solid Bare	100042-024	12 in	
18	Tubing, Teflon	100274-022	12 in	

SCHEMATIC, RECEIVER INVERTER BUFFER

103724 A

A853

POLARIZING PINS: 20 & 44

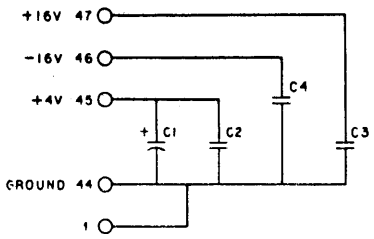

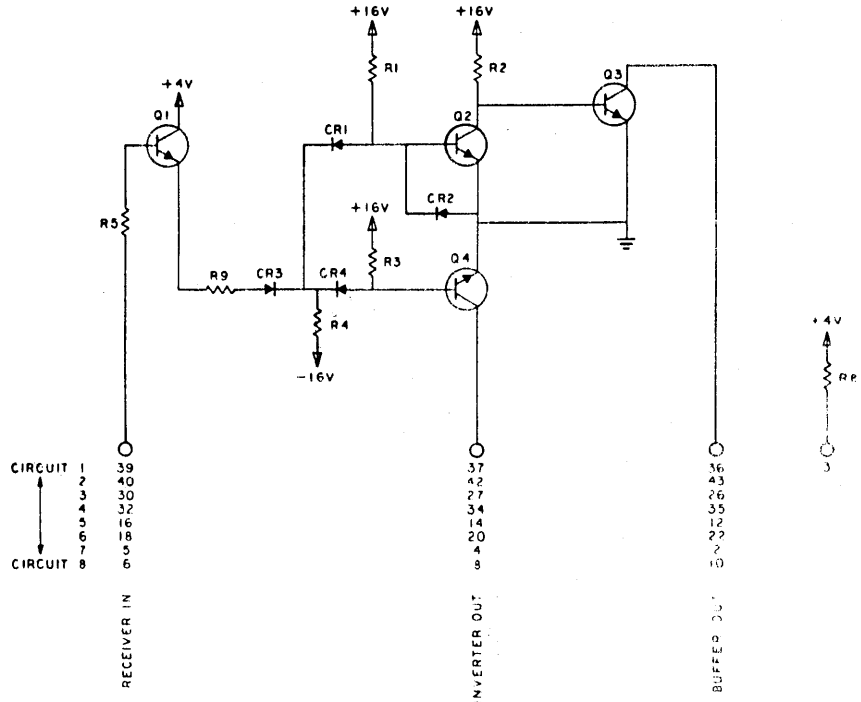

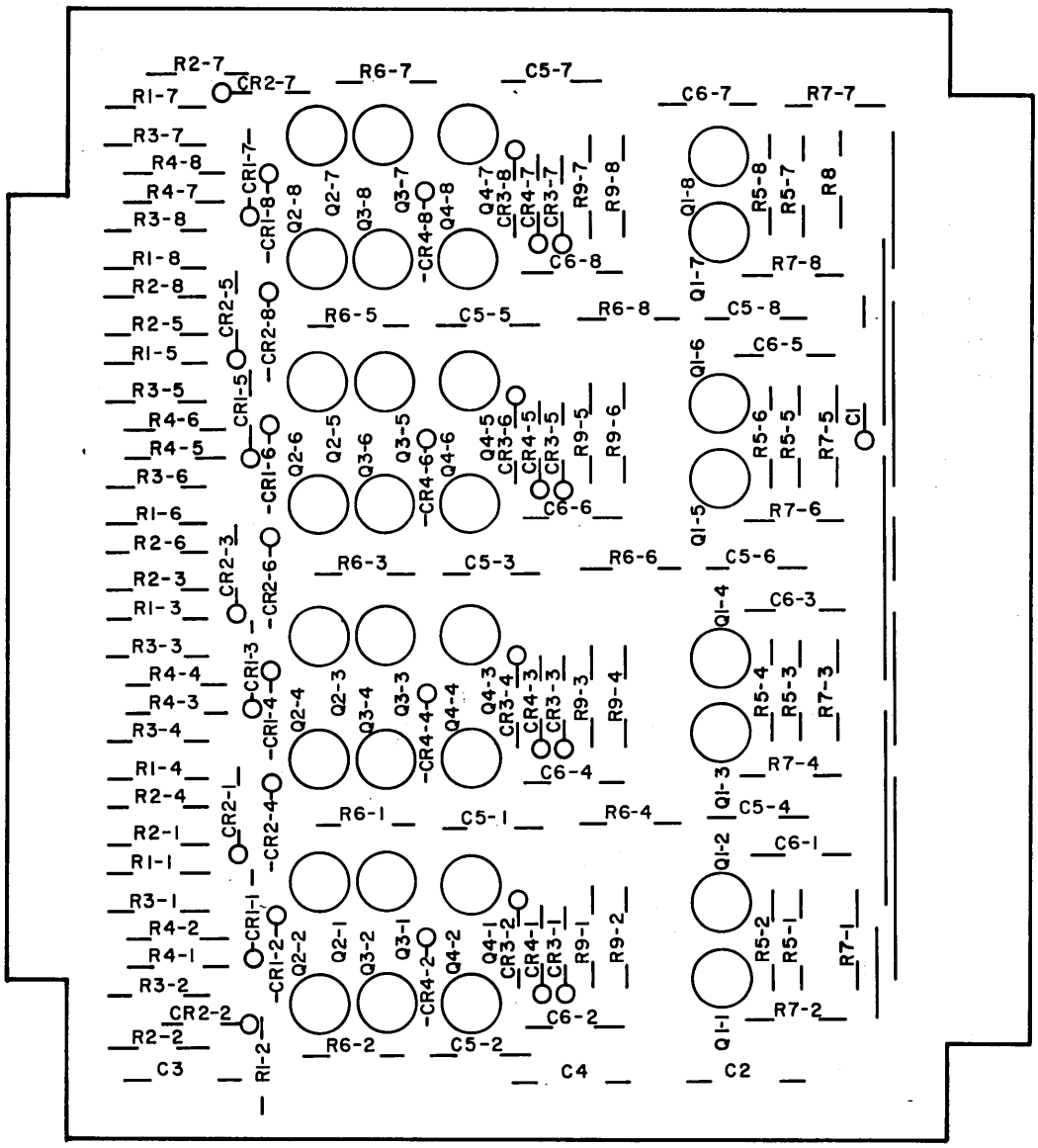

Receiver Inverter Buffer AB53
103726A

REV A

DWG. NO 103726

ML

MATERIAL LIST

DWG. TITLE
ASSY, P. W.
RECEIVER, INVERTER BUFFER

SDS SCIENTIFIC DATA SYSTEMS

ML | DWG. NO. 103726 | REV A

MOD # AB53 DATE 12/14 SHEET 2 OF 2

ITEM	DWG. TITLE	DWG. NO.	NO. REQ.	REMARKS OR CKT. DESIG.
1	Board, Printed Wiring	103725	1	
2	Handle, Circuit Card	100016	1	
3	Eyelet, Tubular	103896-016	2	
4	Strip, Marker	100197	1	
5	Contact, Conn Upper	100097	23	
6	Contact, Conn Lower	100098	24	
7	Transistor, (SDS 216)	103242	32	Q1 thru Q4
8	Diode (SDS 103)	100091	32	CR1 thru CR4
9				
10	Capacitor, Mylar	100308-103	3	C2, 3, 4
11	Capacitor, Tantalum	100312-156	1	C1
12	Resistor, ½ watt	100111-680	8	R9
13	Resistor, ½ watt	100111-151	1	R8
14	Resistor, ½ watt	100111-221	8	R5
15	Resistor, ½ watt	100111-122	8	R4
16	Resistor, ½ watt	100111-302	8	R2
17	Resistor, ½ watt	100111-562	16	R1, 3
18	Wire, Solid Bare	100042-024	8 ½ IN.	
19	Tubing, Teflon	100274-022	8 ½ IN.	

104838 C

REVISIONS			
ZONE	DESCRIPTION		
A	RELEASED TO MFG		
B	SEE REVISION E.O.		
C	SEE REV E.O.		

SCHEMATIC
CABLE DRIVER #2

SIZE D | DWG NO. 104838 | REV C

MODEL NO. A855 | NEXT ASSY 104840

POLARIZING PINS: 32 & 46

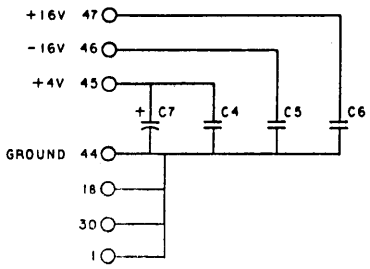

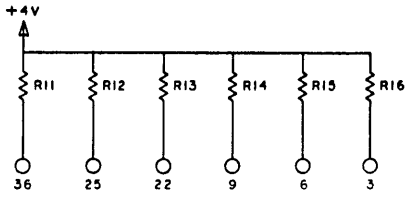

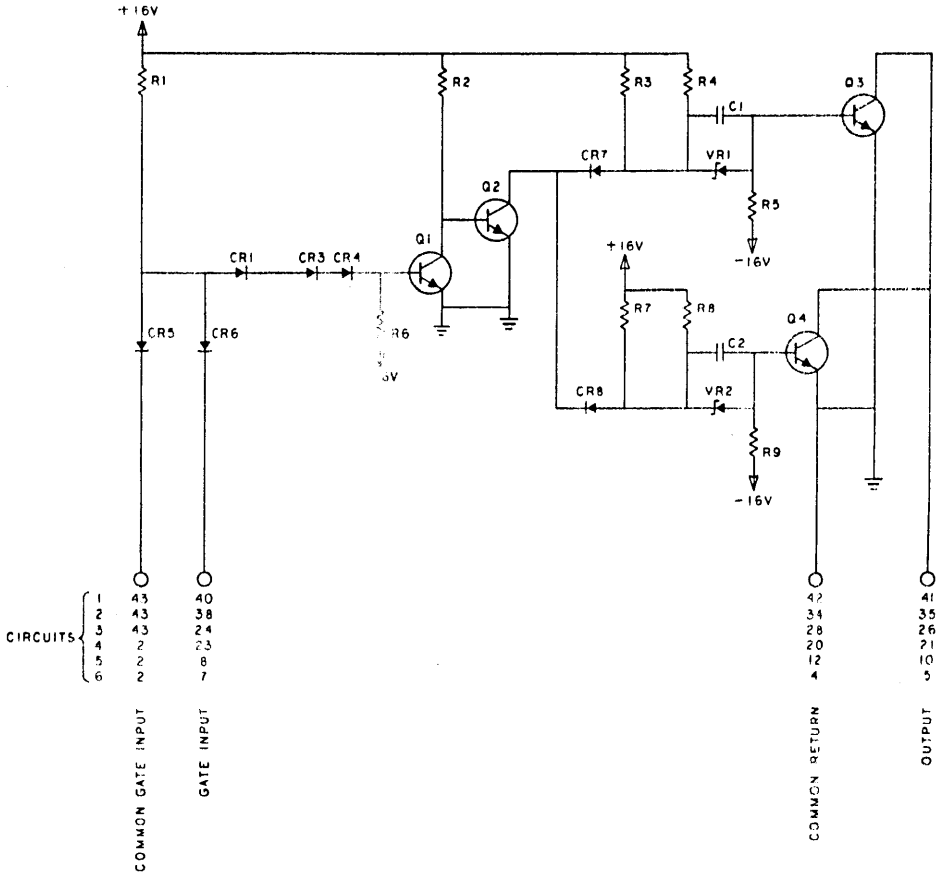

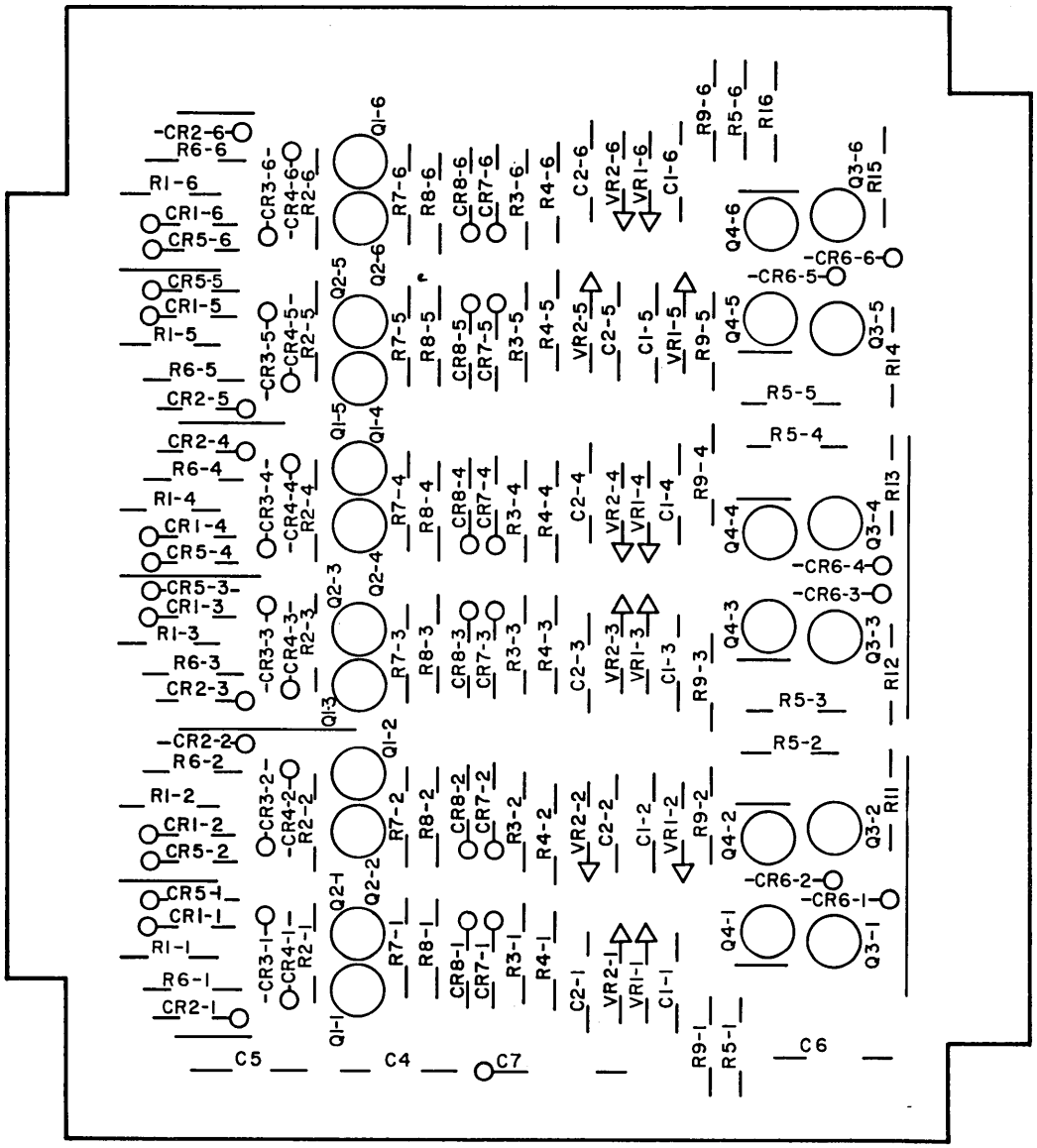

Cable Driver No. 2 AB55
104840E

REV E

DWG. NO. 104840

ML

MATERIAL LIST
DWG. TITLE

SDS SCIENTIFIC DATA SYSTEMS

ML | DWG. NO. 104840 | REV E

ASSY. P.W. CABLE DRIVER #8 ADD # AB55 DATE 1/2 SHEET 2 OF 2

ITEM	DWG. TITLE	DWG. NO.	NO. REQ.	REMARKS OR CKT. DESIG.
1	Board, Printed Wiring	104839	1	
2	Handle, Circuit Card	100016	1	
3	Eyelet, Tubular	103896-016	2	
4	Strip, Marker	100197	1	
5	Contact, Conn Upper	100097	23	
6	Contact, Conn Lower	100098	24	
7	Transistor, SDS 216	103242	12	Q1, 2
8	Transistor, SDS 217	104389	12	Q3, 4
9	Diode SDS 103	100091	42	CR1, CR3 thru CR8
10	Diode SDS 101	100025	12	VR1, 2
11	Capacitor, Silver Mica	100107-221	12	C1, 2
12	Capacitor, Mylar	100308-103	3	C4, 5, 6
13	Capacitor, Tantalum	100312-156	1	C7
14	~~Resistor, ½ watt~~	~~100111-470~~	~~6~~	~~R10~~
15	Resistor, ½ watt	100111-151	6	R11, 12, 13, 14, 15, 16
16	Resistor, ½ watt	100111-122	24	R3, 4, 7, 8
17	Resistor, ¼ watt	100111-302	6	R2
18	Resistor, ½ watt	100111-332	6	R1
19	Resistor, ½ watt	100111-822	12	R5, 9
20	Resistor, ½ watt	100111-153	6	R6
21	Wire, Solid Bare	100042-024	15 in.	
22	Tubing, Teflon	100274-022	15 in.	

106315 B

REVISIONS		
A	REL. TO MFG.	
B	SEE REV E.O.	

POLARIZING PINS 34 & 40

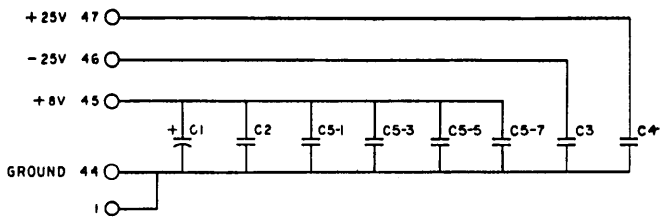

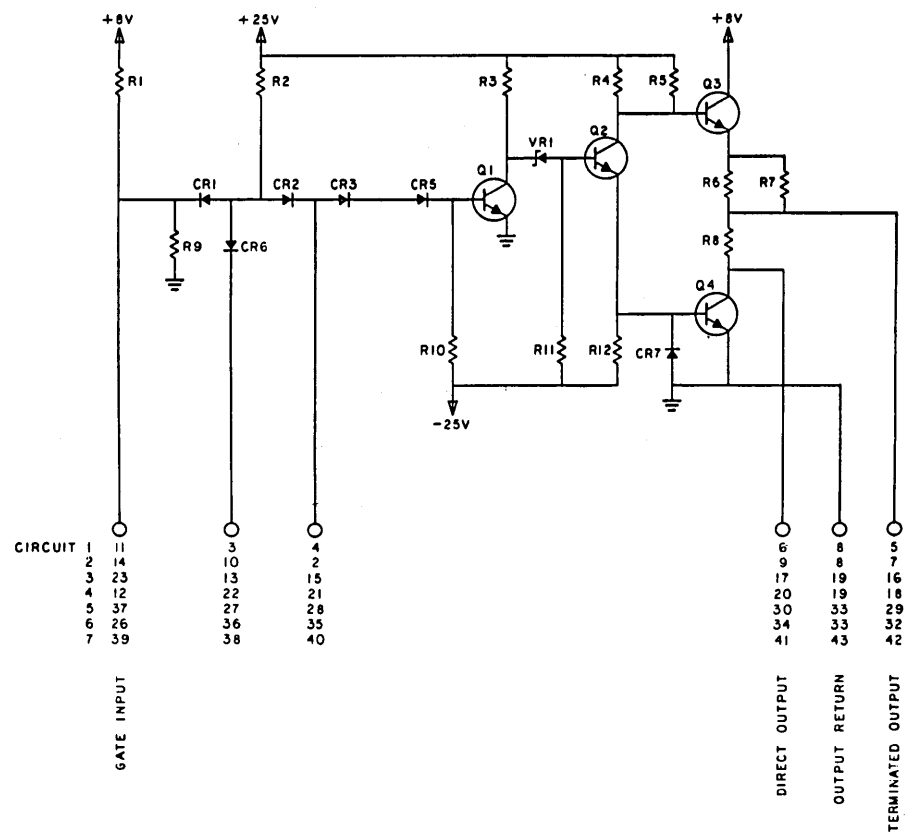

DRAWING NO.	DESCRIPTION	REFERENCE DESIGNATION
	MATERIAL LIST	
	DRAWN 2/11/64	
	CHECK 3-17-64	
	APPR. 4-5-64	

SCHEMATIC, CABLE DRIVER

D 106315 B

AK53

106317

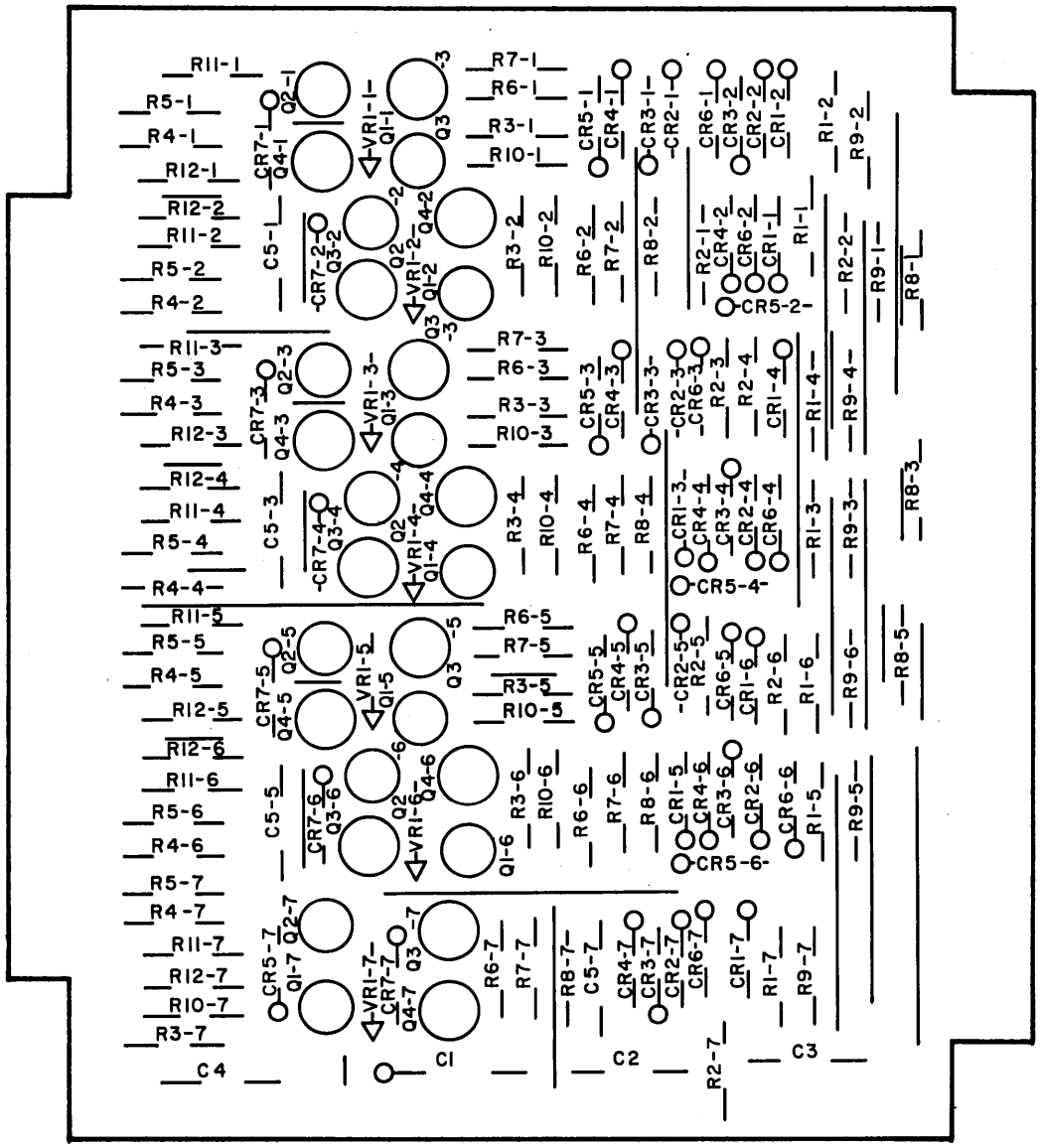

Cable Driver AK53
106317D

REV D

DWG. NO 106317

MATERIAL LIST
DWG. TITLE ASSY, P. W. CABLE DRIVER

SDS SCIENTIFIC DATA SYSTEMS

ML | DWG. NO. 106317 | REV D

MOD # AK53 DATE 2-10 SHEET 2 OF 2

ITEM	DWG. TITLE	DWG. NO.	NO. REQ	REMARKS OR CAT. DESIG.
1	Board, Printed Wiring	106316	1	
2	Handle, Circuit Card	100016	1	
3	Eyelet, Tubular	103896-016	2	
4	Strip, Marker	100197	1	
5	Contact, Conn Upper	100097	23	
6	Contact, Conn Lower	100098	24	
7	Transistor, SDS 216	103242	7	Q1
8	Transistor, SDS 201	100092	7	Q2
9	Transistor, SDS 209	100697	14	Q3, 4
10	Diode, SDS 103	100091	42	CR1, 2, 3, 5, 6, 7
11	Diode, SDS 101	100025	7	VR1
12	Resistor, ½ watt	100111-330	7	R8
13		100111-331	14	R9, R1
14		100111-392	14	R4, 5
15		100111-562	7	R2
16		100111-822	7	R3
17				
18	~~Resistor, ½ watt~~	~~100111-393~~	~~7~~	~~R6~~
19	Capacitor, Mylar	100308-103	7	C2, 3, 4, 5, 1, 5-3, 5-5, 5-7
20	Capacitor, Tantalum	100312-156	1	C1
21	Wire, Solid Bare	100042-024	32 in	
22	Tubing, Teflon	100274-022	32 in	
23	Resistor, ½ watt	100111-223	14	R10, 12
24	Resistor, ½ watt	100111-393	7	R11
25	Resistor, ½ watt	100111-680	14	R6, 7

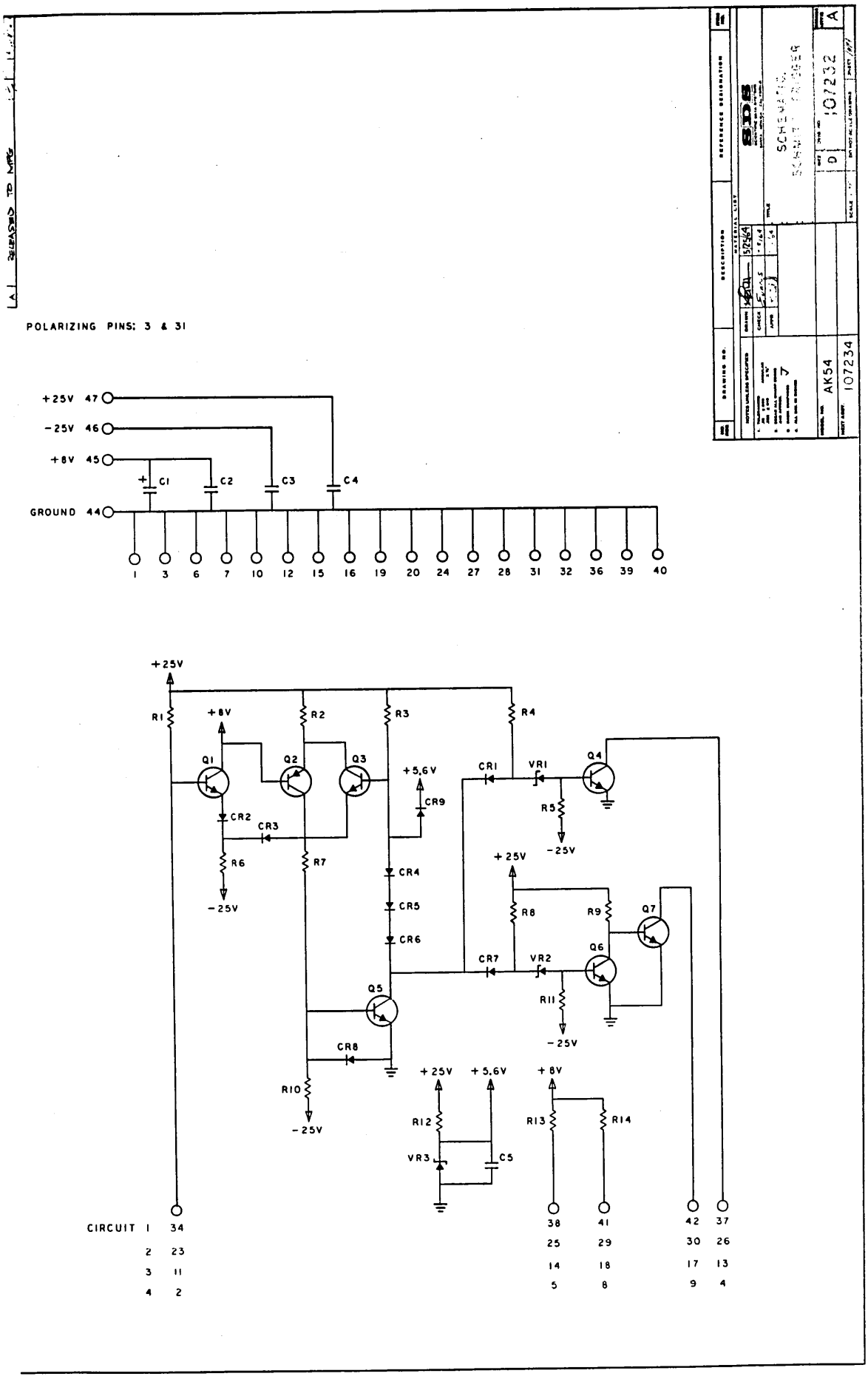

POLARIZING PINS: 3 & 31
+25V 47
-25V 46
+8V 45
GROUND 44
C1
C2
C3
C4
1 3 6 7 10 12 15 16 19 20 24 27 28 31 32 36 39 40
+25V
R1
+8V
R2
R3
R4
Q1
Q2
Q3
+5.6V
CR1
VR1
Q4
CR9
R5
-25V
CR2
CR3
R6
R7
CR4
CR5
CR6
+25V
R8
R9
Q7
Q6
CR7
VR2
R11
Q5
CR8
R10
+25V
+5.6V
+8V
R12
R13
R14
VR3
C5
CIRCUIT 1 34
2 23
3 11
4 2
38 41 42 37
25 29 30 26
14 18 17 13
5 8 9 4
SCHEMATIC
SCHMITT TRIGGER
107232
D
A
AK54
107234

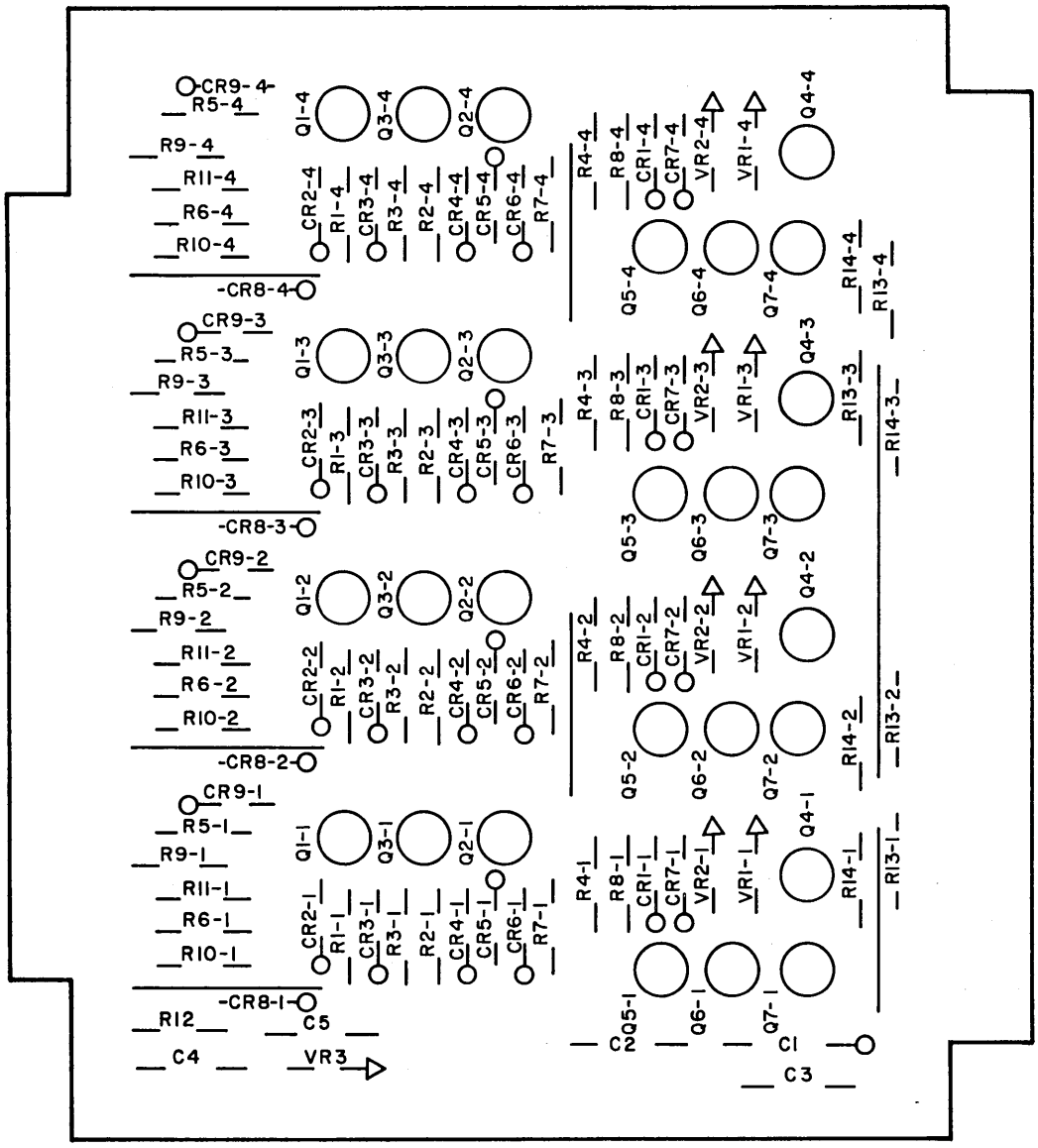

Schmitt Trigger AK54
107234A

REV. A

DRAWING NO. 107234

ML

SDS SCIENTIFIC DATA SYSTEMS

MATERIAL LIST

ML | DRAWING NO. 107234 | REV. A

Assy, P. W.

DRAWING TITLE SCHMITT TRIGGER MODEL NO. AK54 DATE 6/12 SHEET 2 OF 2

ITEM NO.	DRAWING TITLE	DWG. NO.	NO. REQ.	REMARKS ON CKT. DESIG.
1	Board, Printed Wiring	107233	1	
2	Handle, Circuit Card	100016	1	
3	Eyelet, Tubular	103896-016	2	
4	Strip, Marker	100197	1	
5	Contact, Conn. Upper	100097	23	
6	Contact, Conn. Lower	100098	24	
7	Transistor (SDS 216)	103242	24	Q1, 3, 4, 5, 6, 7
8	Transistor (SDS 219)	106378	4	Q2
9	Diode (SDS 101)	100025	8	VR1, 2
10	Diode (SDS 103)	100091	36	CR1 thru CR9
11	Diode (SDS 106)	100323	1	VR3
12	Resistor, 1/2 Watt	100111-392	28	R1, 2, 3, 4, 6, 8, 9
13	Resistor, 1/2 Watt	100111-153	12	R5, 10, 11
14				
15	Resistor, 1/2 Watt	100111-821	8	R13, 14
16	Resistor, 1/2 Watt	100111-102	4	R7
17	Resistor, 1/2 Watt	100111-222	1	R12
18	Capacitor, Tantalum	100312-156	1	C1
19	Capacitor, Mylar	100308-103	4	C2, 3, 4, 5
20	Wire, Solid Bare	100042-024	9 in	
21	Tubing, Teflon	100274-022	9 in	

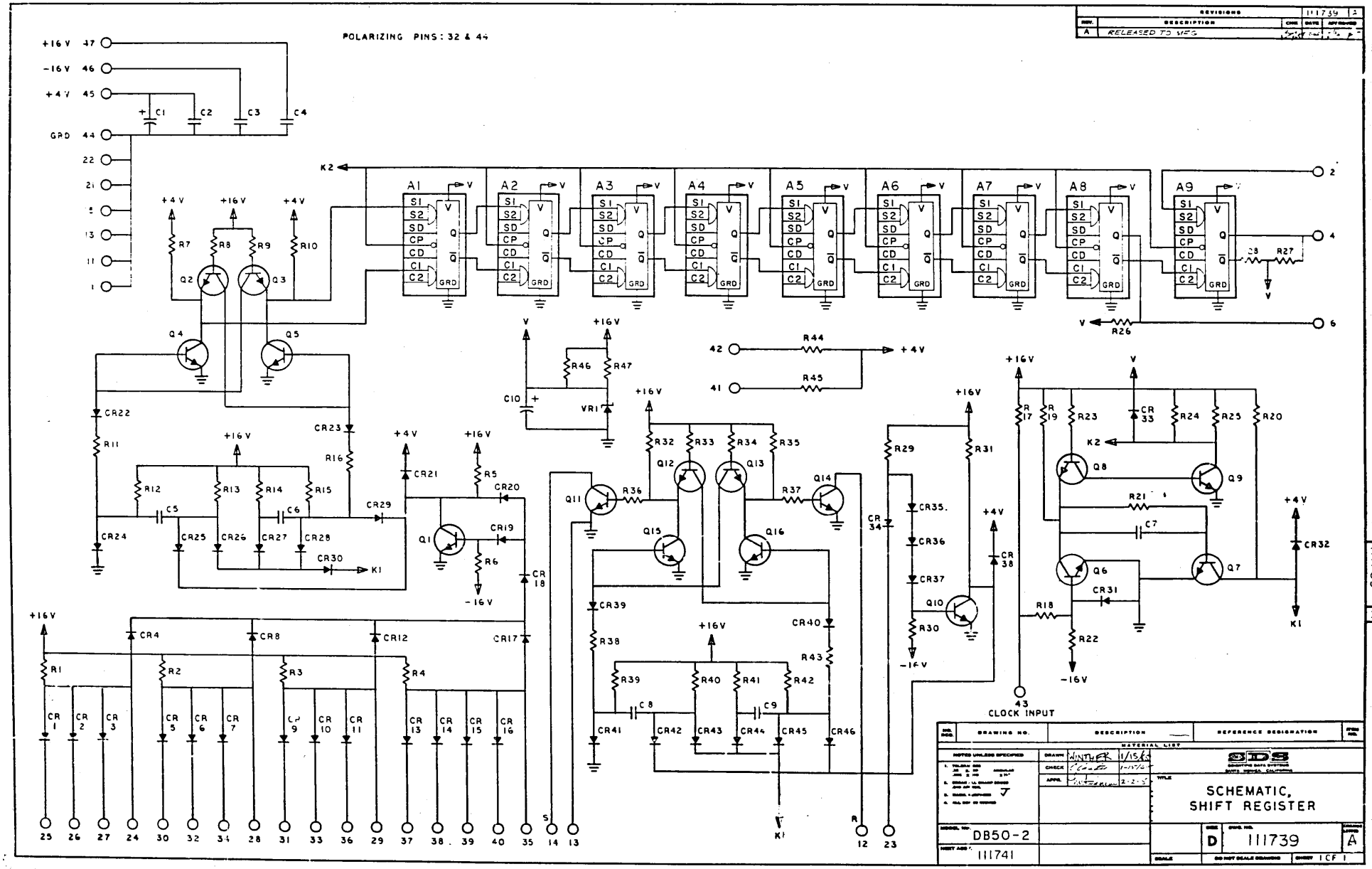

POLARIZING PINS: 32 & 44
+16V 47
-16V 46
+4V 45
GRD 44
A1
A2
A3
A4
A5
A6
A7
A8
A9
CLOCK INPUT
43
SCHEMATIC,
SHIFT REGISTER
DB50-2
111741
111739
A
RELEASED TO MFG

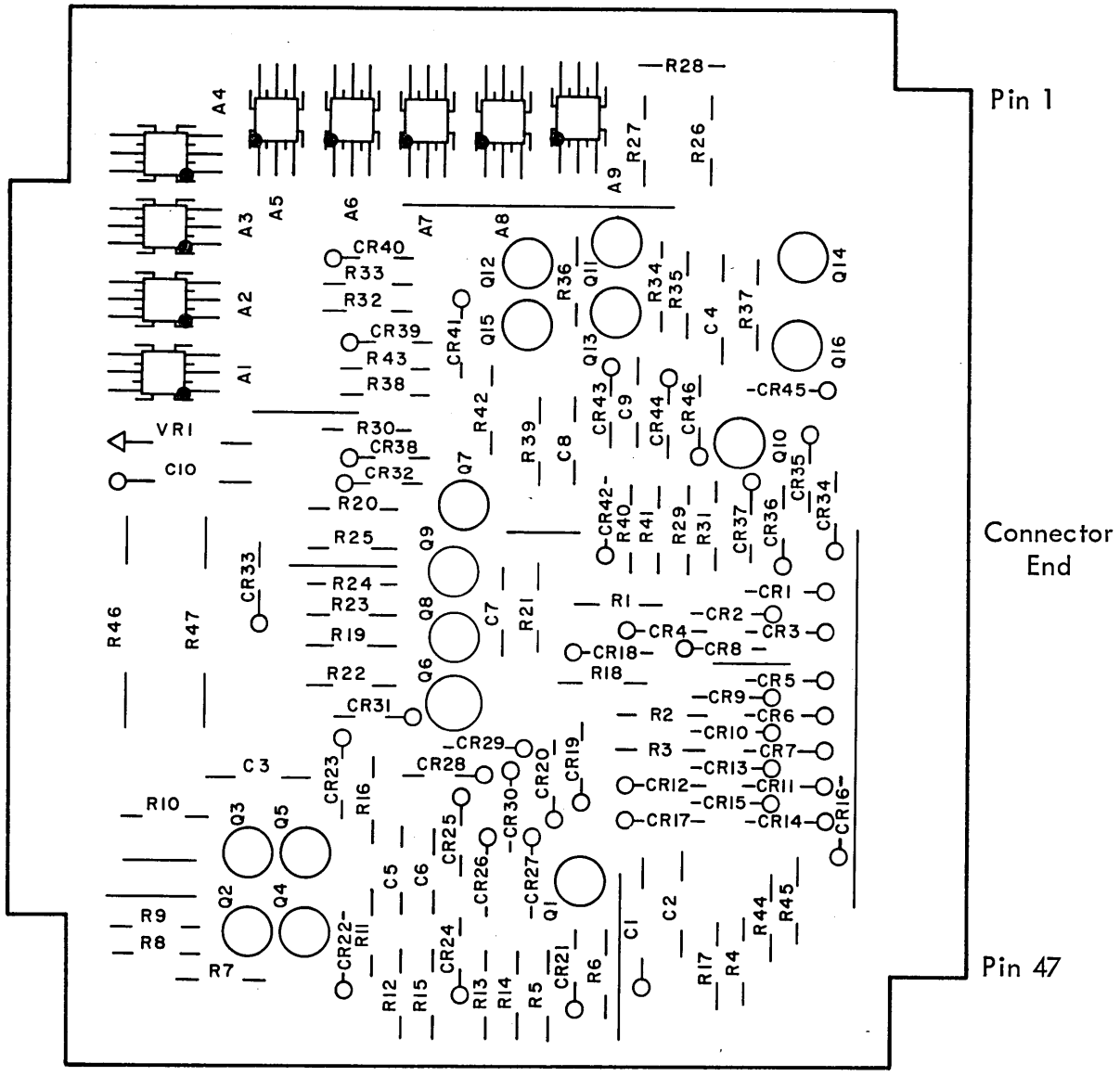

Shift Register DB50-2
111741B

REV. B

DRAWING NO. 111741

ML

SCIENTIFIC DATA SYSTEMS

MATERIAL LIST

ML | DRAWING NO. 111741 | REV.

DRAWING TITLE Assy, PW Shift Register MODEL NO. DB50-2 DATE 1/8/65 SHEET 2 OF 3

ITEM NO.	DRAWING TITLE	DWG. NO.	NO. REQ.	REMARKS ON CKT. DESIG.
1	Board, Printed Wiring	111740	1	
2	Handle, Circuit Card	100016	1	
3	Eyelet, Tubular	103896-016	2	
4	Strip, Marker	100197	1	
5	Contact, Conn. Upper	100097	23	
6	Contact, Conn. Lower	100098	24	
7	Transistor, SDS 216	103242	10	Q1, 4, 5, 6, 9, 10, 11, 14, 15, 16
8	Transistor, SDS 220	106781	5	Q2, 3, 12, 13, 8
9	Diode, SDS 103	100091	46	CR1 thru CR46
10	Integrated Ckt, SDS 301	108217	9	A1 thru A9
11	Resistor, ½ Watt	100111-332	5	R1, 2, 3, 4, 29
12	Resistor, ½ Watt	100111-222	5	R5, 26, 31, 27, 28
13	Resistor, ½ Watt	100111-153	2	R6, 30
14	Resistor, ½ Watt	100111-102	8	R7, 10, 13, 14, 24, 25, 40, 41
15	Resistor, ½ Watt	100111-562	4	R8, 9, 33, 34
16	Resistor, ½ Watt	100111-101	5	R11, 16, 38, 43, 21
17	Resistor, ½ Watt	100111-822	4	R12, 15, 39, 42
18	Resistor, ½ Watt	100111-122	2	R20, 19
19	Resistor, ½ Watt	100111-182	1	R17
20	Resistor, ½ Watt	100111-681	1	R18
21	Resistor, ½ Watt	100111-103	1	R22
22				
23	Resistor, ½ Watt	100111-302	3	R32, 35, 23
24	Resistor, ½ Watt	100111-470	2	R36, 37
25	Resistor, ½ Watt	100111-151	2	R44, 45
26	Capacitor, Tantalum	100312-156	2	C1, 10
27	Capacitor, Mylar	100308-103	3	C2, 3, 4
28	Capacitor, Mica	100107-820	4	C5, 6, 8, 9
29	Capacitor, Mica	100107-221	1	C7
30				
31				
32				

REV. B

DRAWING NO. 111741

ML

SCIENTIFIC DATA SYSTEMS

MATERIAL LIST

ML | DRAWING NO. 111741 | REV. B

DRAWING TITLE Assy. PW Shift Register MODEL NO. DB50-2 DATE 1/8/65 SHEET 3 OF 3

ITEM NO.	DRAWING TITLE	DWG. NO.	NO. REQ.	REMARKS ON CKT. DESIG.
33	Transistor, SDS 217	104389	1	Q7
34	Tubing, Teflon	100274-022	8 in.	
35	Wire, Solid Bare	100042-024	6 in.	
36	Resistor	100681-161	2	R46, 47
37	Diode, (SDS 114)	101711	1	VR1
38	Schematic	111739	x	Ref
39	Drawing List	111742	x	Ref
40	Test spec	111743	x	Ref

104201 B

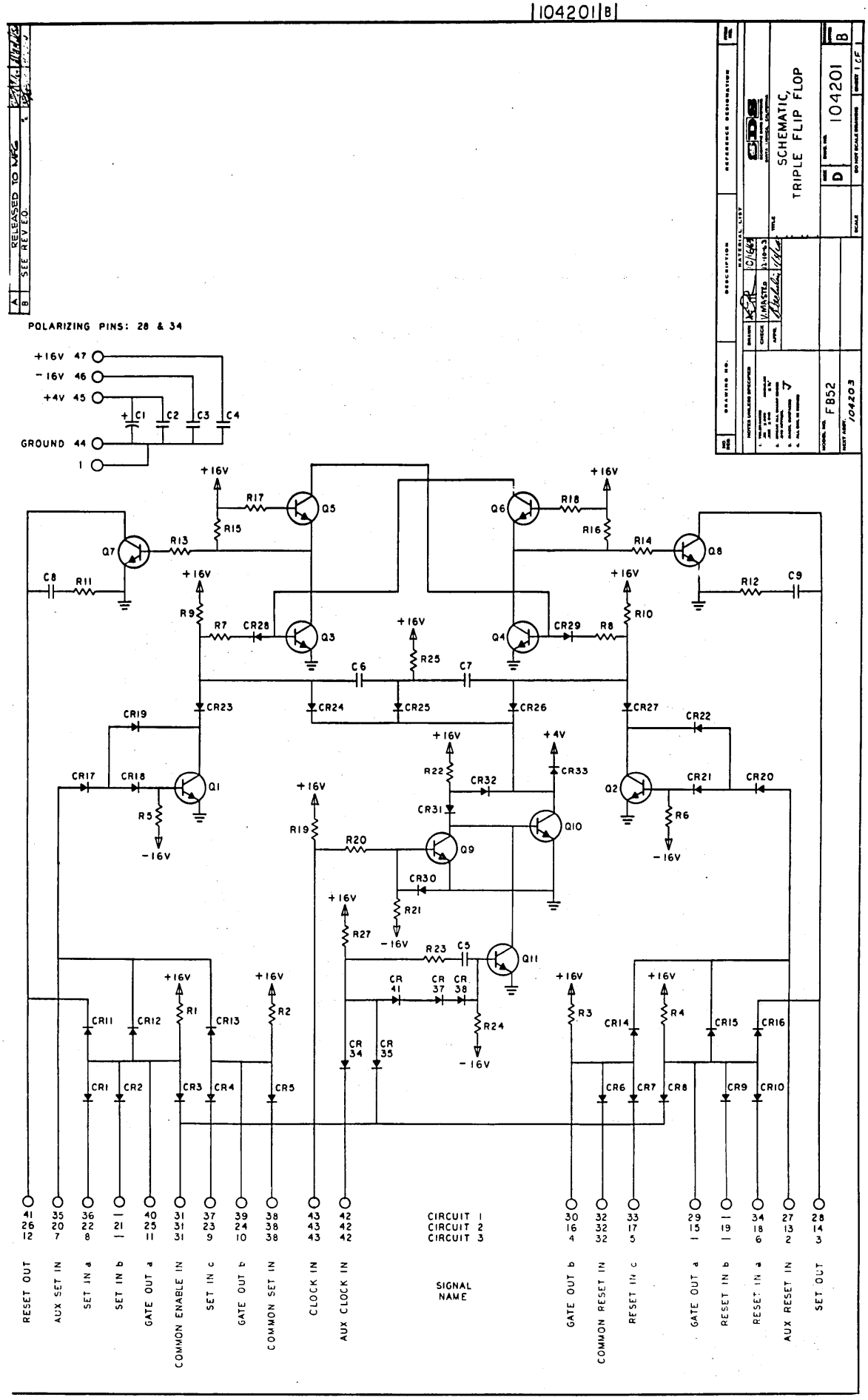

RELEASED TO MFG
SEE REV E.O.
POLARIZING PINS: 28 & 34
+16V 47
-16V 46
+4V 45
GROUND 44
1
C1
C2
C3
C4
Q1
Q2
Q3
Q4
Q5
Q6
Q7
Q8
Q9
Q10
Q11
R1
R2
R3
R4
R5
R6
R7
R8
R9
R10
R11
R12
R13
R14
R15
R16
R17
R18
R19
R20
R21
R22
R23
R24
R25
R27
C5
C6
C7
C8
C9
CR1
CR2
CR3
CR4
CR5
CR6
CR7
CR8
CR9
CR10
CR11
CR12
CR13
CR14
CR15
CR16
CR17
CR18
CR19
CR20
CR21
CR22
CR23
CR24
CR25
CR26
CR27
CR28
CR29
CR30
CR31
CR32
CR33
CR34
CR35
CR37
CR38
CR41
+16V
-16V
+4V
CIRCUIT 1
CIRCUIT 2
CIRCUIT 3
SIGNAL NAME
RESET OUT
AUX SET IN
SET IN a
SET IN b
GATE OUT a
COMMON ENABLE IN
SET IN c
GATE OUT b
COMMON SET IN
CLOCK IN
AUX CLOCK IN
GATE OUT b
COMMON RESET IN
RESET IN c
GATE OUT a
RESET IN b
RESET IN a
AUX RESET IN
SET OUT
SCHEMATIC, TRIPLE FLIP FLOP
104201
D
B
FB52
104203

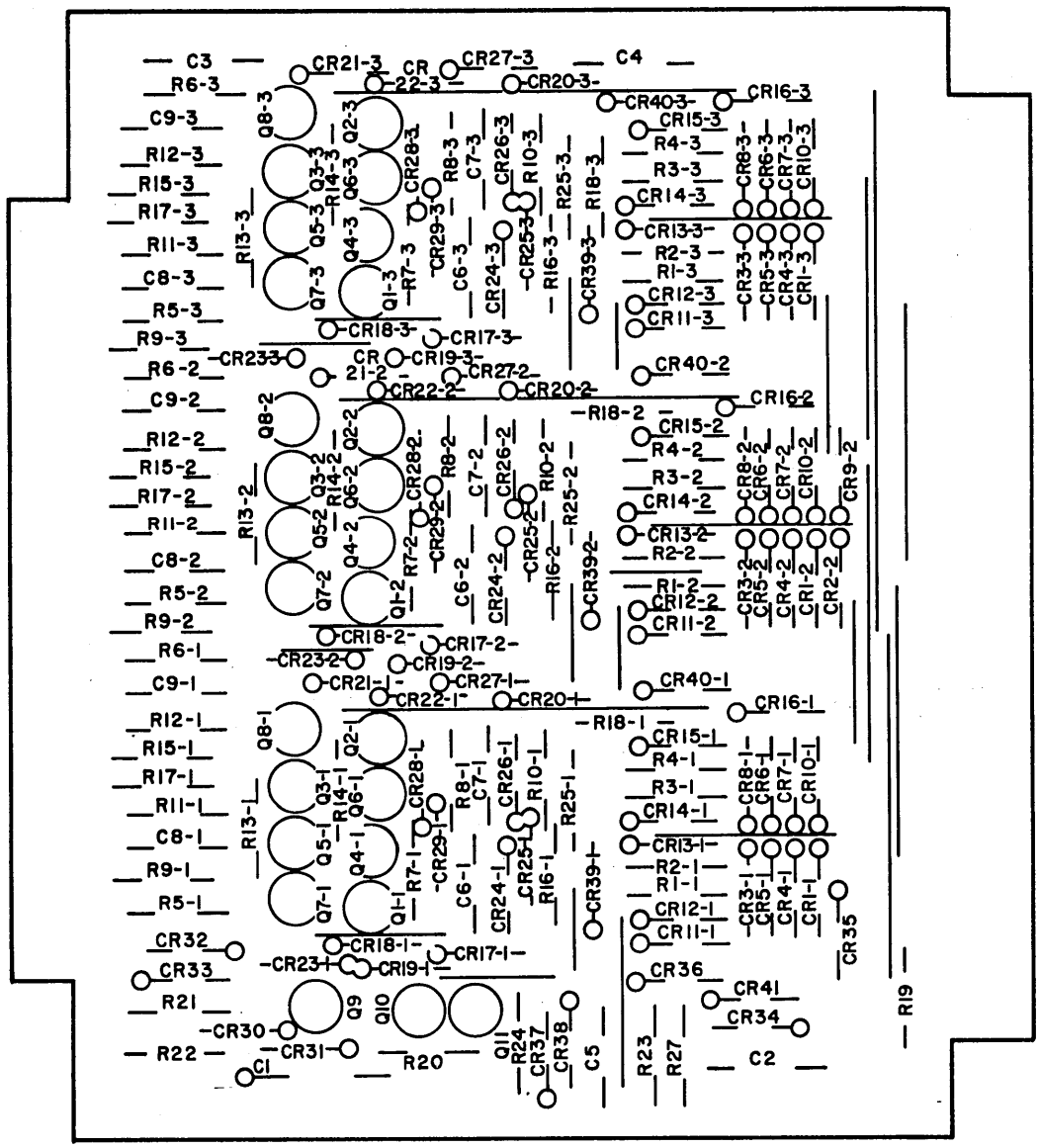

Triple Flip-Flop FB52
104203D

REV D

DWG. NO 104203

ML

MATERIAL LIST

DWG. TITLE
ASSEMBLY, P. W.
TRIPLE FLIP FLOP

SDS

MOD # FB52

ML | DWG. NO. 104203 | REV D

DATE 12/4/3 SHEET 2 OF 2

ITEM	DWG. TITLE	DWG. NO.	NO. REQ.	REMARKS OR CKT. DESIG.
1	Board, Printed Wiring	104202	1	
2	Handle, Circuit Card	100016	1	
3	Eyelet, Tubular	103896-016	2	
4	Strip, Marker	100197	1	
5	Contact, Conn. Upper	100097	23	
6	Contact, Conn. Lower	100098	24	
7	Transistor, SDS 216	103242	21	Q1 thru Q4, Q7 thru Q11
8	Transistor, SDS 220	106781	6	Q5, 6
9	Diode, SDS 103	100091	92	CR1 thru CR35, 37, 38, 41
10	~~Capacitor, Mica~~	~~100107-220~~	~~7~~	~~C8, 9, 5~~
11	Resistor, ½ watt	100111-103	1	R21
12	Capacitor, Mica	100107-820	6	C6, 7
13	Capacitor, Mylar	100308-103	3	C2, 3, 4
14	Capacitor, Tantalum	100312-156	1	C1
15	Resistor, ½ watt	100111-102	3	R25
16	Resistor, ½ watt	100111-562	6	R17, 18
17	Resistor, ½ watt	100111-302	6	R15, 16
18	Resistor, ½ watt	100111-470	7	R13, 14, 23
19	~~Resistor, ½ watt~~	~~100111-151~~	~~6~~	~~R11, 12~~
20	Resistor, ½ watt	100111-101	6	R7, 8
21	Resistor, ½ watt	100111-822	6	R9, 10
22	Resistor, ½ watt	100111-153	6	R5, 6
23	Resistor, ½ watt	100111-332	13	R1, 2, 3, 4, 27
24	Resistor, ½ watt	100111-122	1	R22
25	Resistor, ½ watt	100111-681	1	R20
26	Resistor, ½ watt	100111-182	1	R19
27	Resistor, ½ watt	100111-563	1	R24
28	Wire, Solid Bare	100042-024	35 in.	
29	Tubing Teflon	100274-022	35 in.	
30	Capacitor, Mica	100107-470	1	C5

104561 C

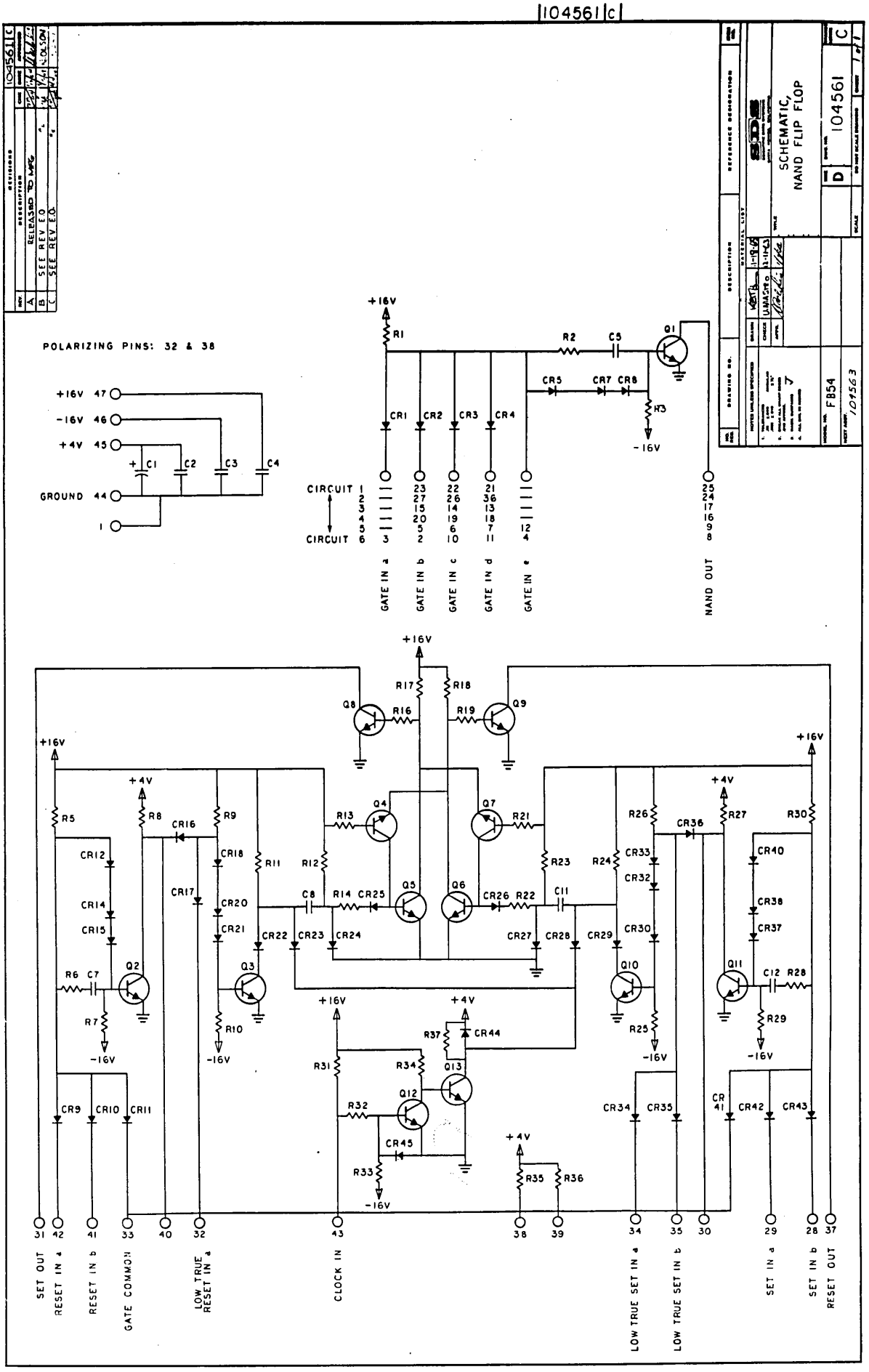

SCHEMATIC, NAND FLIP FLOP
104561
D
C
FB54
104563
POLARIZING PINS: 32 & 38
+16V 47
-16V 46
+4V 45
GROUND 44
1
C1
C2
C3
C4
CIRCUIT 1
CIRCUIT 6
GATE IN a
GATE IN b
GATE IN c
GATE IN d
GATE IN e
NAND OUT
SET OUT
RESET IN a
RESET IN b
GATE COMMON
LOW TRUE RESET IN a
CLOCK IN
LOW TRUE SET IN a
LOW TRUE SET IN b
SET IN a
SET IN b
RESET OUT

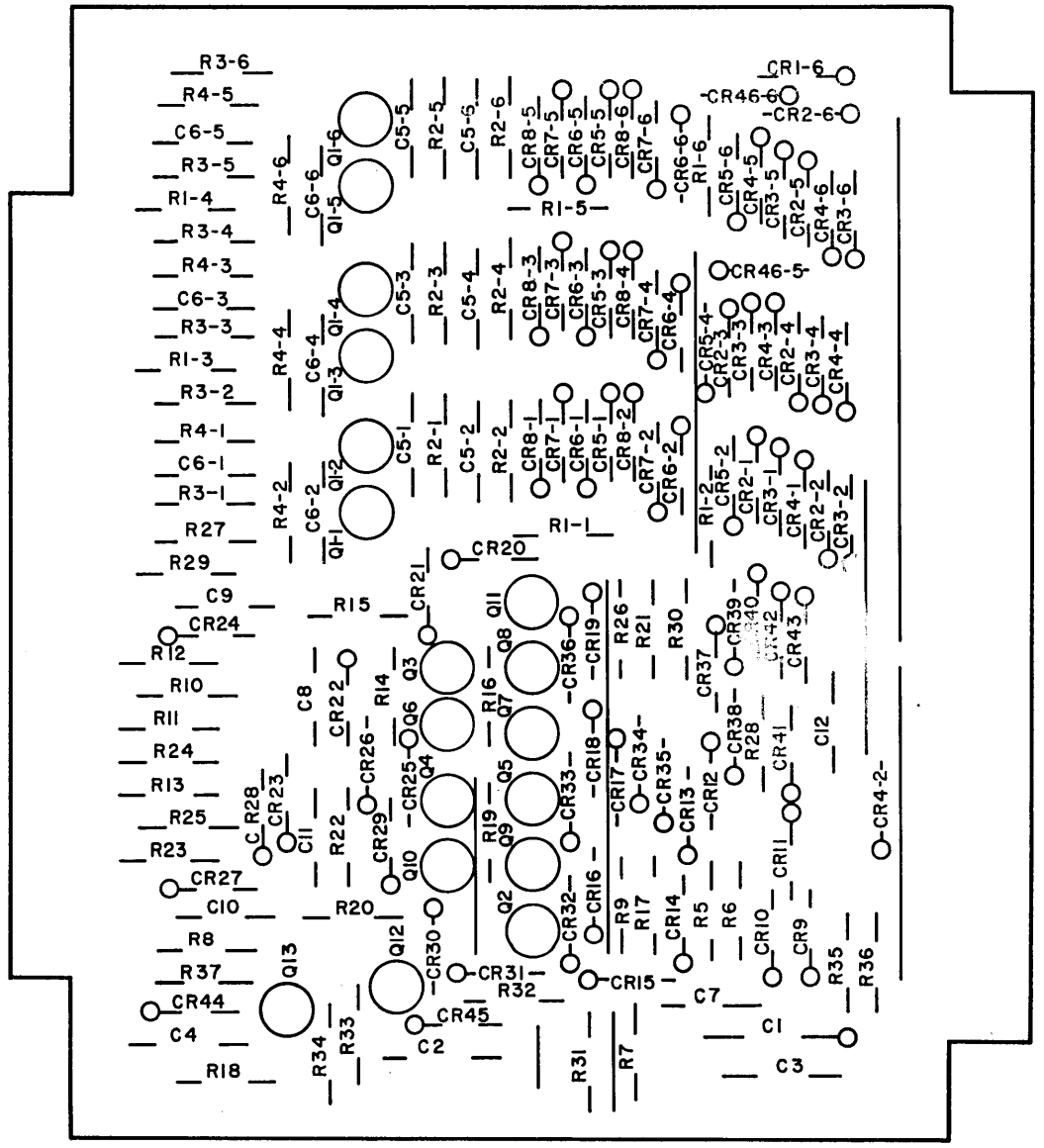

NAND Flip-Flop FB54
104563E

REV E

DWG. NO. 104563

ML

MATERIAL LIST

DWG. TITLE
ASSEMBLY, P. W.
NAND, FLIP FLOP

SDS SCIENTIFIC DATA SYSTEMS

ML | DWG. NO. 104563 | REV F

MOD # FB54 DATE 12/4 SHEET 2 OF 2

ITEM	DWG. TITLE	DWG. NO.	NO. REQ.	REMARKS OR CKT. DESIG.
1	Board, Printed Wiring	104562	1	
2	Handle, Circuit Card	100016	1	
3	Eyelet, Tubular	103896-016	2	
4	Strip, Marker	100197	1	
5	Contact, Conn Upper	100097	23	
6	Contact, Conn Lower	100098	24	
7	Transistor, SDS 216	103242	16	Q1 thru Q3, 5, 6, Q8 thru 13
8	~~Diode, SDS 103~~	~~100091~~	~~72~~	~~CR1 thru CR46~~
9	Capacitor, Silver Mica	100107-470	8	C5, 7, 12,
10	Capacitor, Silver Mica	100107-820	2	C8, 11
11	Capacitor, Mylar	100308-103	3	C2, 3, 4
12	Capacitor, Tantalum	100312-156	1	C1
13	Resistor, ½ watt	100111-470	10	R2, 6, 16, 19, 28
14	Resistor, ½ watt	100111-101	2	R14, 22
15	Resistor, ½ watt	100111-151	4	R8, , 27, 35, 36
16	Resistor, ½ watt	100111-822	2	R12, 23
17	Resistor, ½ watt	100111-681	1	R32
18	Resistor, ½ watt	100111-102	2	R11, 24
19	Resistor, ½ watt	100111-222	1	R34
20	Resistor, ½ watt	100111-302	2	R17, 18
21	Resistor, ½ watt	100111-332	10	R1, 5, 9, 26, 30,
22	Resistor, ½ watt	100111-562	2	R13, R21
23	Resistor, ½ watt	100111-103	1	R33
24	Resistor, ½ watt	100111-223	2	R10, 25
25	Resistor, ½ watt	100111-563	8	R3, 7, 29
26	Wire, Solid Bare	100042-024	18 in.	
27	Tubing, Teflon	100274-022	18 in	
28	Resistor, ½ watt	100111-121	1	R37
29	Resistor, ½ watt	100111-182	1	R31
30	Transistor, SDS 220	106781	2	Q4, Q7
31	Diode, SDS 103	100091	72	CR1 thru CR5 , 7 thru 12, 14
				CR15, 16, 17, 18, 20 thru 30
				CR32 thru 38, 40 thru 46

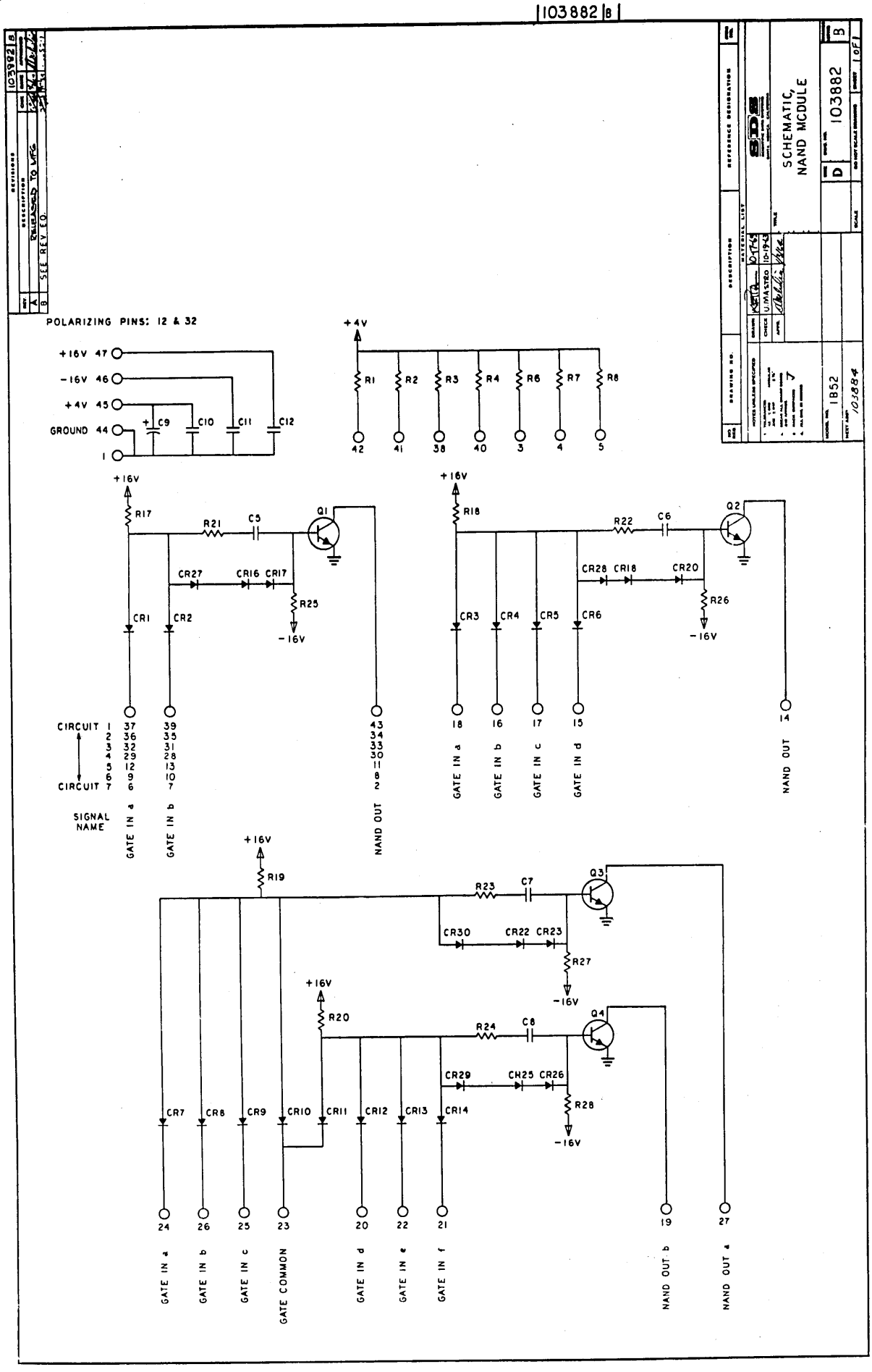
SCHEMATIC, NAND MODULE
103882
POLARIZING PINS: 12 & 32
+16V 47
-16V 46
+4V 45
GROUND 44
1
C9
C10
C11
C12
+4V
R1
R2
R3
R4
R6
R7
R8
42
41
38
40
3
4
5
+16V
R17
R21
C5
Q1
CR27
CR16
CR17
R25
-16V
CR1
CR2
CIRCUIT 1 37 39
2 36 35
3 32 31
4 29 28
5 12 13
6 9 10
CIRCUIT 7 6 7
SIGNAL NAME
GATE IN a
GATE IN b
NAND OUT
43 34 33 30 11 8 2
+16V
R18
R22
C6
Q2
CR28
CR18
CR20
R26
-16V
CR3
CR4
CR5
CR6
18
16
17
15
14
GATE IN a
GATE IN b
GATE IN c
GATE IN d
NAND OUT
+16V
R19
R23
C7
Q3
CR30
CR22
CR23
R27
-16V
+16V
R20
R24
C8
Q4
CR29
CH25
CR26
R28
-16V
CR7
CR8
CR9
CR10
CR11
CR12
CR13
CR14
24
26
25
23
20
22
21
19
27
GATE IN a
GATE IN b
GATE IN c
GATE COMMON
GATE IN d
GATE IN e
GATE IN f
NAND OUT b
NAND OUT a

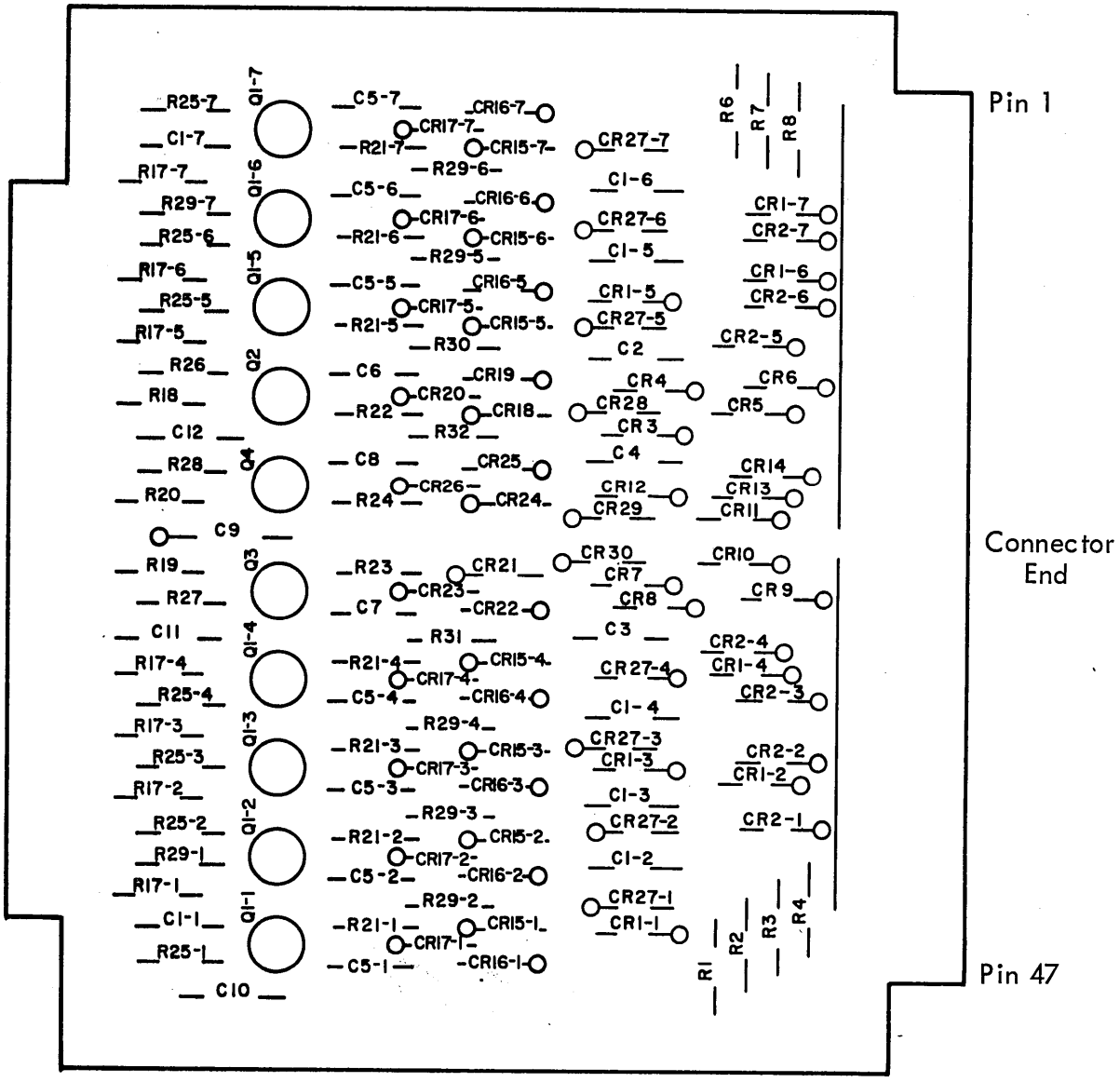

NAND Module IB52
103884D

REV D

DWG. NO. 103884

ML

MATERIAL LIST

DWG. TITLE
ASSY, PRINTED WIRING
NAND MODULE

SDS SCIENTIFIC DATA SYSTEMS

ML | DWG. NO. 103884 | REV D

MOD # IB52 DATE SHEET 2 OF 2

ITEM	DWG. TITLE	DWG. NO.	NO. REQ.	REMARKS OR CKT. DESIG.
1	Board, Printed Wiring	103883	1	
2	Handle, Circuit Card	100016	1	
3	Eyelet, Tubular	103896-016	2	
4	Strip, Marker	100197	1	
5	Contact, Conn. Upper	100097	23	
6	Contact, Conn. Lower	100098	24	
7	Transistor (SDS 216)	103242	10	Q1, 2, 3, 4
~~8~~	~~Diode (SDS 103)~~	~~100091~~	~~66~~	~~CR1 thru CR39~~
9	Capacitor, Silver Mica	100107-470	10	C5, 6, 7, 8
10				
11	Capacitor, Mylar	100308-103	3	C10, 11, 12
12	Capacitor, Tantalum	100312-156	1	C9
13	Resistor, ½ watt	100111-332	10	R17, 18, 19, 20
14	Resistor, ½ watt	100111-470	10	R21, 22, 23, 24
15	Resistor, ½ watt	100111-563	10	R25, 26, 27, 28
16	Resistor, ½ watt	100111-151	7	R1 thru 4, 6, 7, 8
17	Wire, Solid Bare	100042-024	10 in.	
18	Tubing, Teflon	100274-022	10 in.	
19	Diode (SDS 103)	100091	56	CR1 thru CR14, 16, 17, 18, 20, 22, 23, 25 thru 30

104554 B

A	RELEASED TO MFG
B	SEE REV E.O.

POLARIZING PINS: 32 & 36

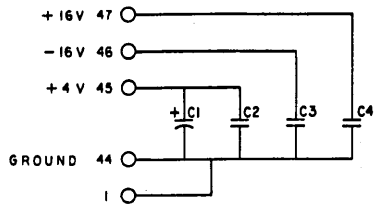

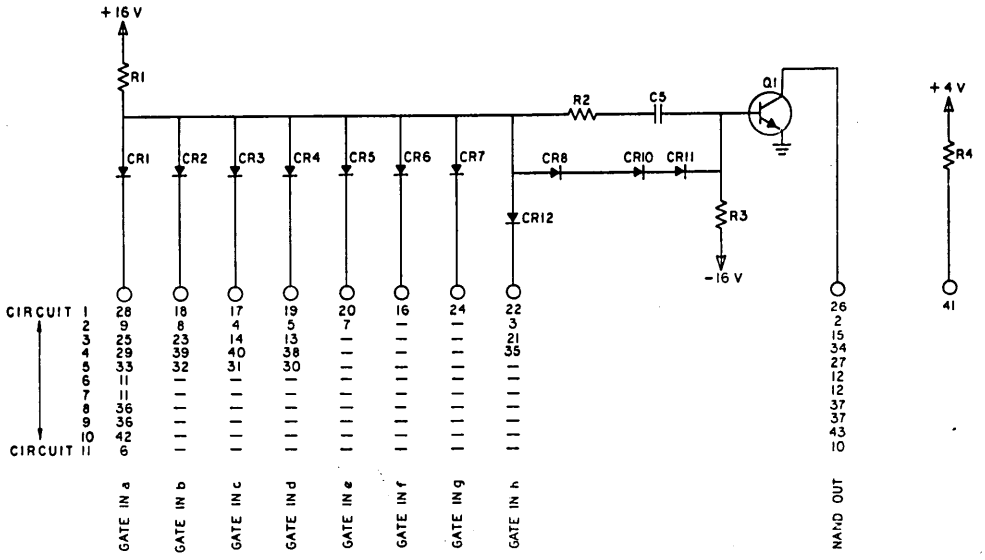

DRAWING NO.	
DESCRIPTION	
REFERENCE DESIGNATION	
MATERIAL LIST	
DRAWN	WINTHER 11/16/67
CHECK	V. MASTRO 11-13-67
APPR.	[illegible] 11/16/67
TITLE	SCHEMATIC, NAND #2
SIZE	D
DWG. NO.	104554
REV	B
SCALE	—
SHEET	1 OF 1
MODEL NO.	IB56
NEXT ASSY.	104556

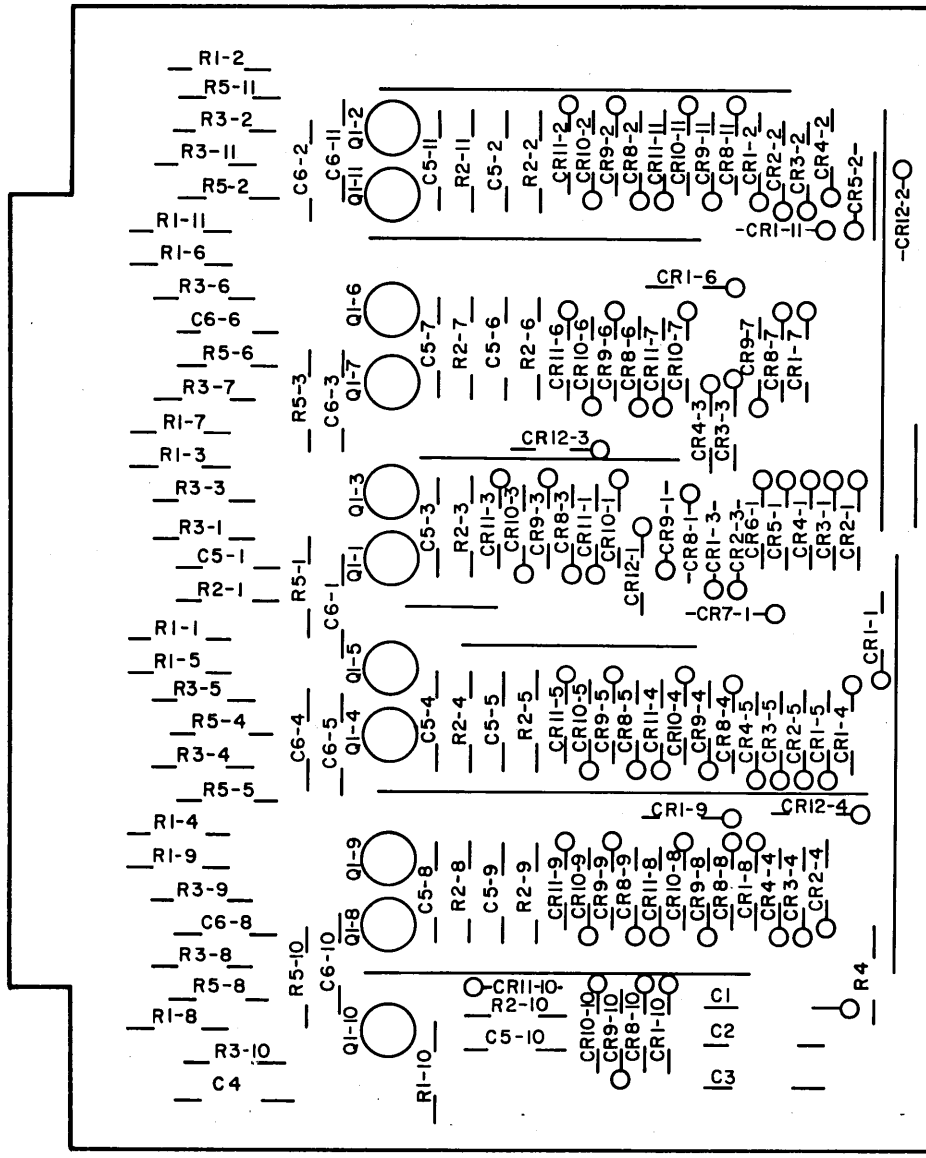

NAND No. 2 IB56
104556E

REV E

DWG. NO. 104556

ML

MATERIAL LIST

DWG. TITLE
ASSEMBLY, P. W.
NAND # 2

SDS SCIENTIFIC DATA SYSTEMS

ML | DWG. NO. 104556 | REV E

MOD # IB 56 DATE 12/4 SHEET 2 OF 2

ITEM	DWG. TITLE	DWG. NO.	NO. REQ	REMARKS OR CKT. DESIG.
1	Board, Printed Wiring	104555	1	
2	Handle, Circuit Card	100016	1	
3	Eyelet, Tubular	103896-016	2	
4	Strip, Marker	100197	1	
5	Contact, Conn Upper	100097	23	
6	Contact, Conn Lower	100098	24	
7	Trinsistor SDS 216	103242	11	Q1
8	Diode, SDS 103	100091	67	CR1 thru CR8, CR10,11,12
9	Capacitor, Silver Mica	100107-470	11	C5
10	Capacitor, Mylar	100308-103	3	C2,3,4
11	Capacitor, Tantalum	100312-156	1	C1
12	Resistor, ½ watt	100111-151	1	R4
13	Resistor, ½ watt	100111-470	11	R2
14	Resistor, ½ watt	100111-332	11	R1
15	Resistor, ½ watt	100111-563	11	R3
16	Wire, Solid Bare	100042-024	24 in.	
17	Tubing, Teflon	100274-022	24 in.	

104486 B

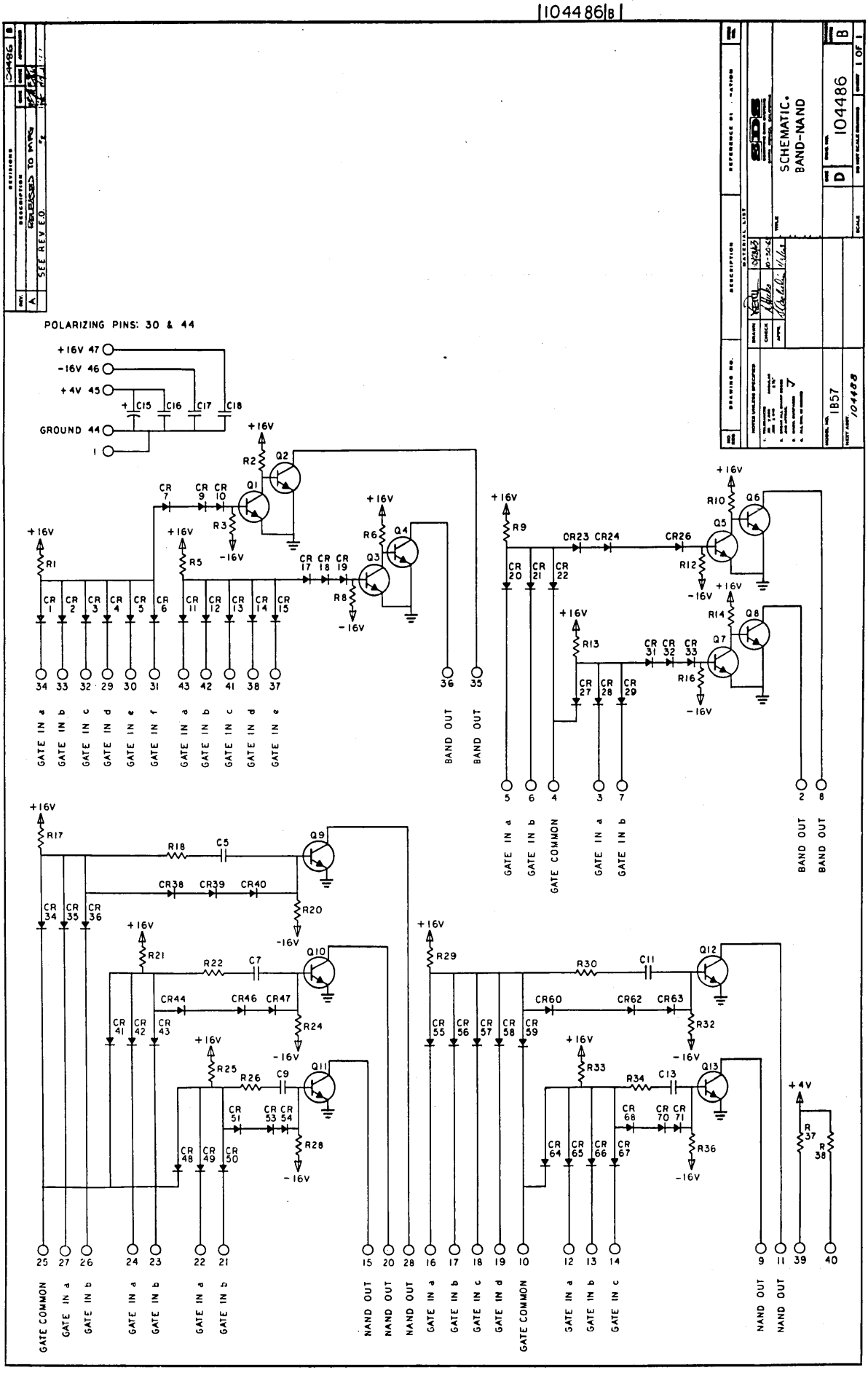

SCHEMATIC, BAND-NAND
104486
B
1 OF 1
1857
104488
REVISIONS
A
SEE REV E.O.
POLARIZING PINS: 30 & 44
+16V 47
-16V 46
+4V 45
GROUND 44
1
C15
C16
C17
C18
GATE IN a
GATE IN b
GATE IN c
GATE IN d
GATE IN e
GATE IN f
BAND OUT
GATE COMMON
NAND OUT

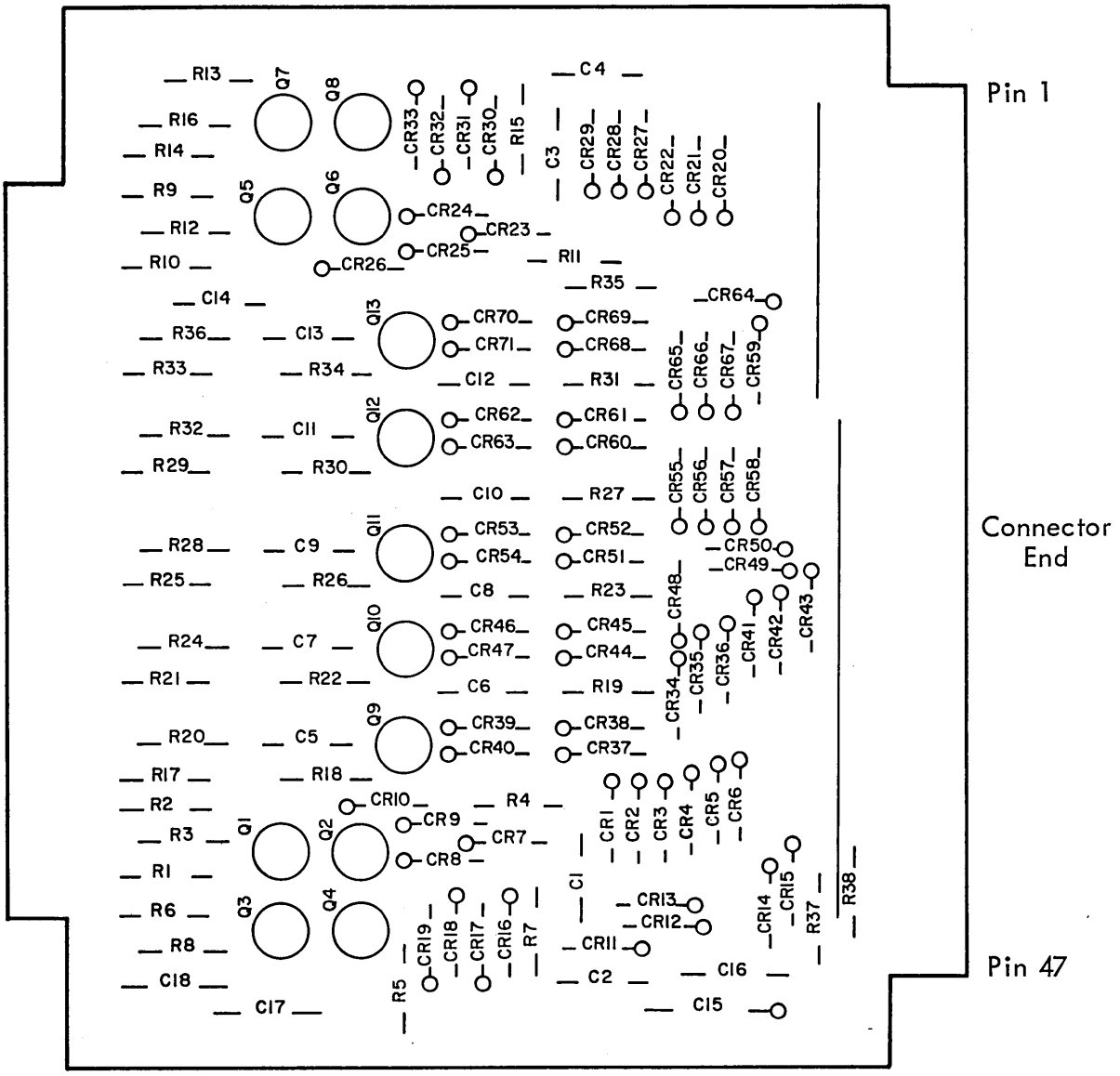

BAND NAND IB57
104488D

EST D

DVG. NO. 104488

ML

MATERIAL LIST

DVG. TITLE ASSY, PRINTED WIRING BAND - NAND

SDS SCIENTIFIC DATA SYSTEMS

ML | DVG. NO. 104488 | REV D

MOD 0 IB57 DATE 12/4 SHEET 2 OF 2

ITEM	DVG. TITLE	DVG. NO.	NO. REQ	REMARKS OR CKT. DESIG.
1	Board, Printed Wiring	104487	1	
2	Handle, Circuit Card	100016	1	
3	Eyelet, Tubular	103896-016	2	
4	Strip, Marker	100197	1	
5	Contact, Conn Upper	100097	23	
6	Contact, Conn Lower	100098	24	
7	Transistor, SDS 216	103242	13	Q1 thru Q13
8				
9	~~Diode, SDS 103~~	~~100091~~	~~71~~	~~CR1 thru CR71~~
10				
11	Capacitor, Mica	100107-470	5	C5, 7, 9, 11, 13
12	Capacitor, Mylar	100308-103	3	C16, 17, 18
13	Capacitor, Tantalum	100312-156	1	C15
14	Resistor, $\frac{1}{8}$ watt	100111-151	2	R37, 38
15	Resistor, $\frac{1}{2}$ watt	100111-470	5	R18, 22, 26, 30, 34
16	Resistor, $\frac{1}{2}$ watt	100111-332	9	R1, 5, 9, 13, 17, 21, 25, 29, 33
17	Resistor, $\frac{1}{2}$ watt	100111-153	4	R3, 8, 12, 16,
18	Wire, Solid Bare	100042-024	10 in	
19	Tubing, Teflon	100274-022	10 in	
20	Resistor, $\frac{1}{2}$ watt	100111-563	5	R20, 24, 28, 32, 36
21	Resistor, $\frac{1}{2}$ watt	100111-302	4	R2, 6, 10, 14
22	Diode, SDS 103	100091	62	CR1 thru 7, 9 thru 15
				CR17 thru 24, 26 thru 29
				CR31 thru 36, 38 thru 44
				CR46 thru 51, 53 thru 60
				CR 62 thru 68, 70, 71

104894 B

REV.	DESCRIPTION	DATE	APPROVED
A	RELEASED TO MFG.		
B	SEE REV E.O.		

POLARIZING PINS: 42 & 46

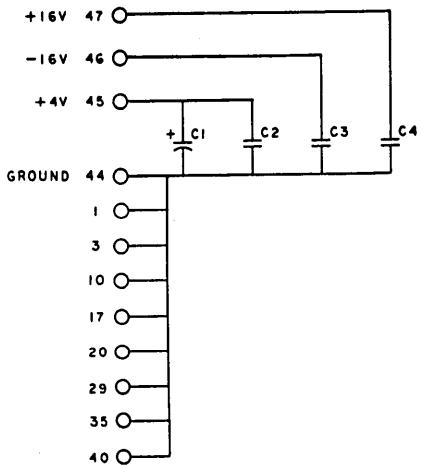

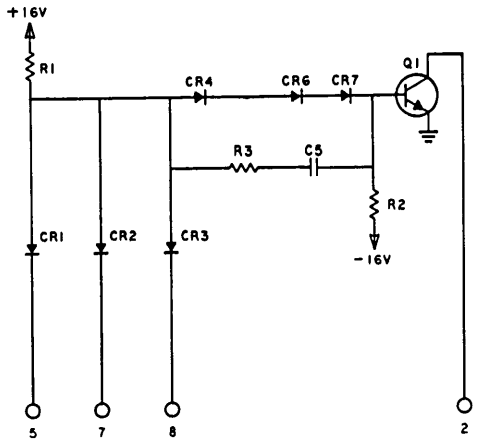

CIRCUIT				
1	5	7	8	2
2	6	7	8	4
3	13	14	15	9
4	12	7	8	11
5	24	—	25	16
6	27	14	15	18
7	23	14	15	19
8	22	—	25	21
9	26	—	25	28
10	31	—	32	30
11	33	—	32	34
12	37	—	32	36
13	38	—	43	39
14	42	—	43	41

DRAWING NO. 1B59

NEXT ASSY. 104896

MATERIAL LIST

SCHEMATIC, NAND #4

SIZE D DWG. NO. 104894 B

SCALE

DO NOT SCALE DRAWING

SHEET

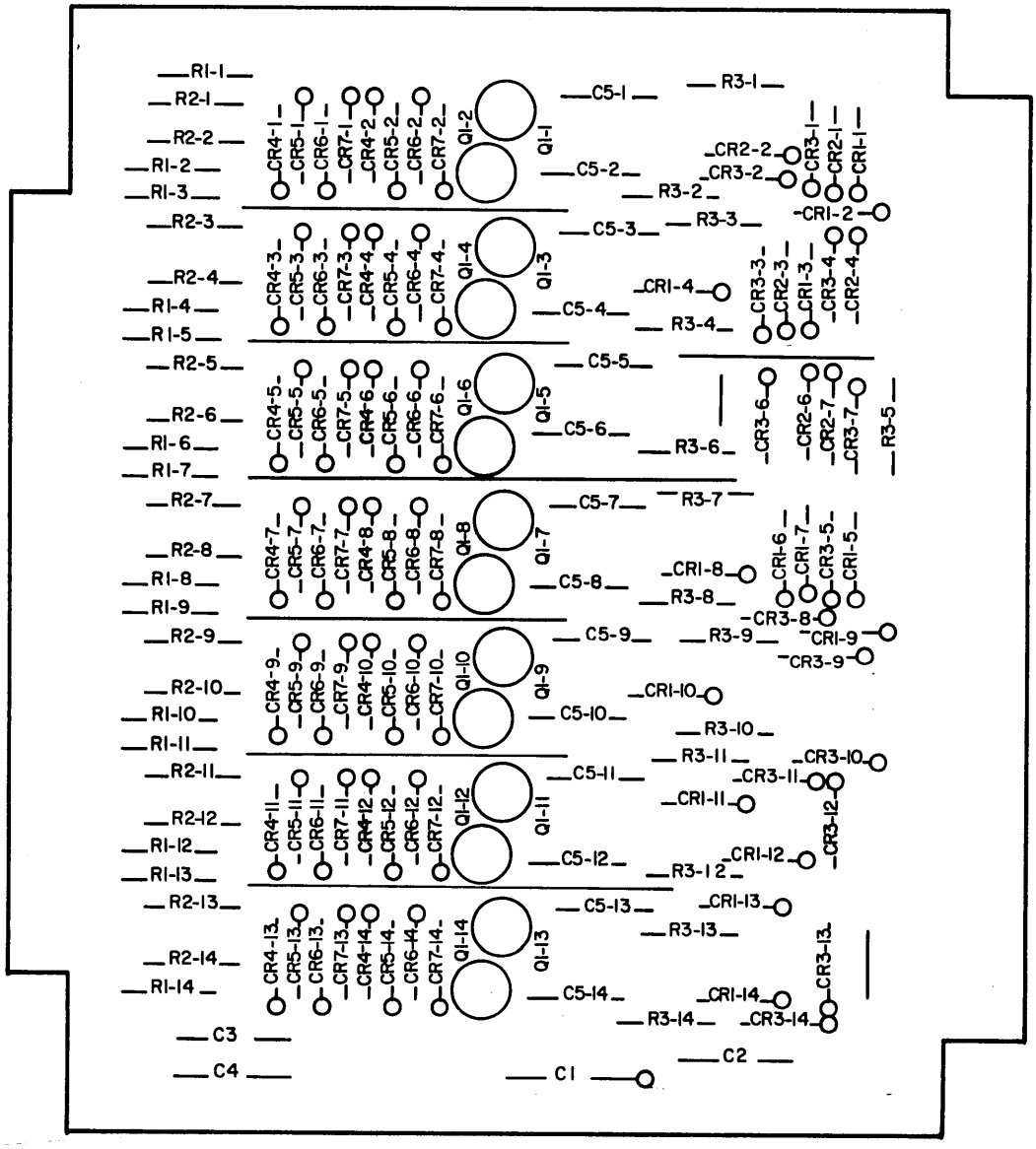

NAND No. 4 IB59
104896D

REV D

DWG. NO. 104896

ML

MATERIAL LIST
DWG. TITLE

SDS SCIENTIFIC DATA SYSTEMS

ML | DWG. NO. 104896 | REV D

ASSY. P.W. NAND #4

MOD # IB59 DATE 2-10 SHEET 2 OF

ITEM	DWG. TITLE	DWG. NO.	NO. REQ	REMARKS OR CET. DESIG.
1	Board, Printed Wiring	104895	1	
2	Handle, Circuit Card	100016	1	
3	Eyelet, Tubular	103896-016	2	
4	Strip, Marker	100197	1	
5	Contact, Conn Upper	100097	23	
6	Contact, Conn Lower	100098	24	
7	Transistor, SDS 216	103242	14	Q1
8	Diode, SDS 103	100091	76	CR1 thru CR4, 6, 7
9	Capacitor, Silver Mica	100107-470	14	C5
10	Capacitor, Mylar	100308-103	3	C2, 3, 4
11	Capacitor, Tantalum	100312-156	1	C1
12	Resistor, ½ watt	100111-332	14	R1
13	Resistor, ½ watt	100111-563	14	R2
14	Resistor, ½ watt	100111-470	14	R3
15	Wire, Solid Bare	100042-024	24 in	
16	Tubing, Teflon	100274-022	24 in	

104641 B

REV	DESCRIPTION	DATE	APPROVED
A	RELEASED TO MFG		
B	SEE REV. E.O.		

104641

POLARIZING PINS : 28 & 40

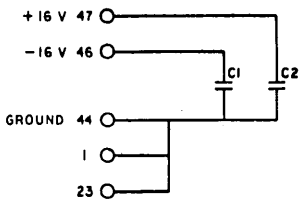

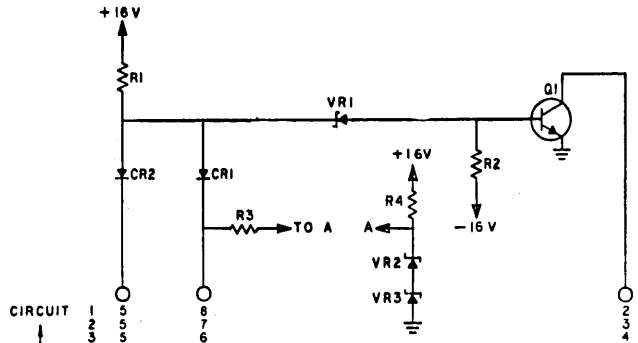

CIRCUIT	GATE COMMON	GATE IN	INVERTER OUT
1	5	8	2
2	5	7	3
3	5	6	4
4	5	13	11
5	5	10	12
6	5	9	14
7	5	19	15
8	5	20	17
9	35	16	18
10	35	27	24
11	35	22	25
12	35	21	28
13	35	26	29
14	35	34	30
15	35	33	32
16	37	36	43
17	37	38	40
18	37	39	42
19	37	31	41

DRAWING NO. | DESCRIPTION | REFERENCE DESIGNATION

NOTES UNLESS SPECIFIED

MATERIAL LIST

DRAWN WINTHER 11/14/63
CHECK V. MASTRO 12-13-63
APPR

SDS

TITLE SCHEMATIC, +8 TO +4 INTERFACE

D 104641 B

SCALE — SHEET 1 OF 1

MODEL NO. NB50

NEXT ASSY. 104642

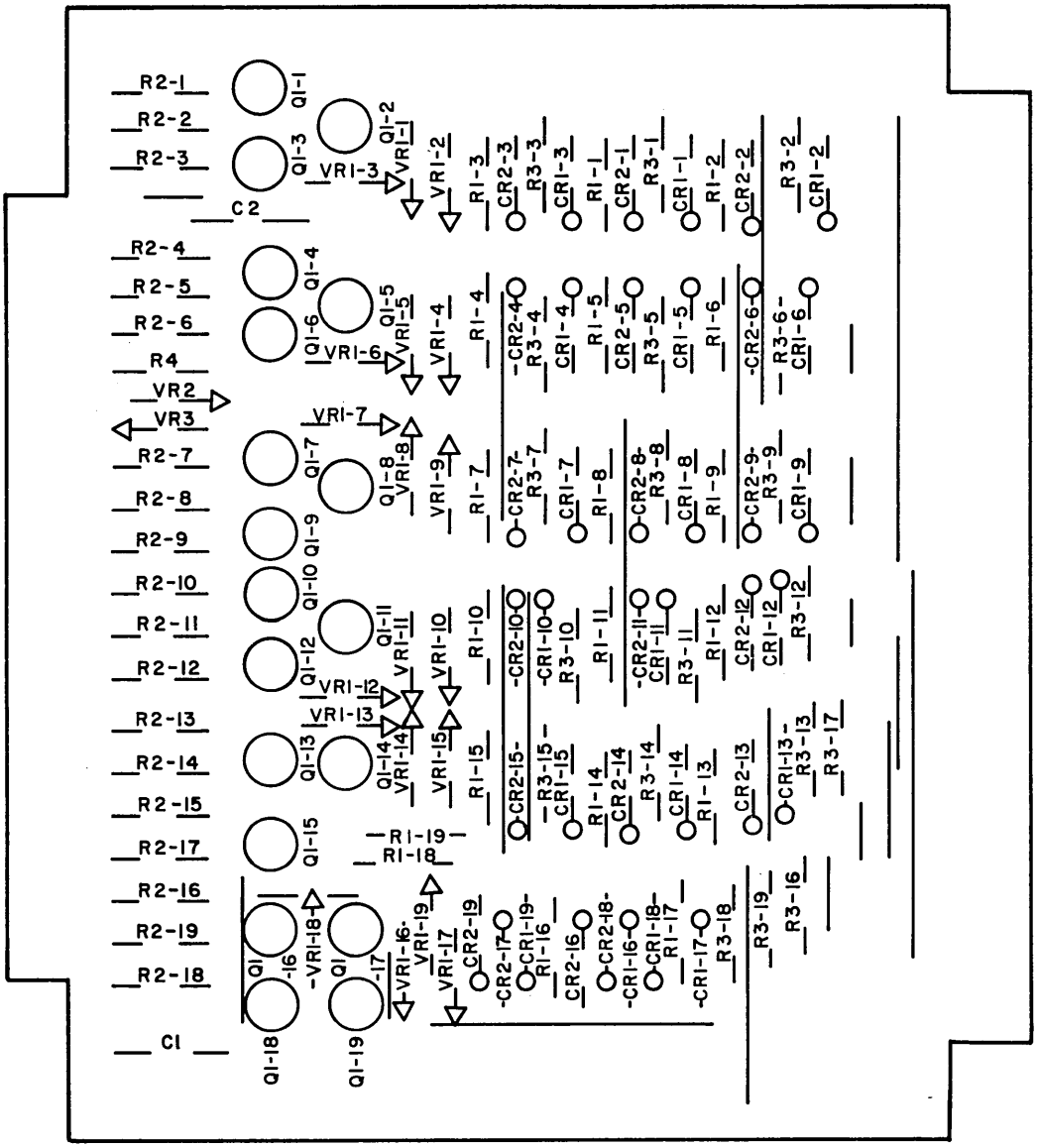

+8 To +4 Interface NB50
104642C

REV C

DWG. NO. 104642

ML

MATERIAL LIST

DWG. TITLE ASSY, +8 To +4 INTERFACE

SDS

ML | DWG. NO. 104642 | REV C

MOD # NB50 DATE SHEET 2 OF 2

ITEM	DWG. TITLE	DWG. NO.	NO. REQ.	REMARKS OR CKT. DESIG.
1	Board, Printed Wiring	104762	1	
2	Handle, Circuit Card	100016	1	
3	Eyelet, Tubular	103896-016	2	
4	Strip, Marker	100197	1	
5	Contact, Conn Upper	100097	23	
6	Contact, Conn Lower	100098	24	
7	Transistor, SDS 216	103242	19	Q1
8	Diode, SDS 103	100091	38	CR1 , CR2
9	Diode, SDS 115	107063	21	VR1, VR2, VR3
10	Capacitor , Mylar	100308-103	2	C1, 2
11	Resistor, $\frac{1}{2}$ watt	100111-332	19	R1
12	Resistor, $\frac{1}{2}$ watt	100111-393	19	R2
13	Wire, Solid Bare	100042-024	18 in.	
14	Tubing, Teflon	100274-022	18 in.	
15	Resistor, $\frac{1}{2}$ watt	100111-153	19	R3
16	Resistor, $\frac{1}{2}$ watt	100111-471	1	R4

A	RELEASED TO MFG
B	SEE REV E.O.
C	SEE REV E.O.

POLARIZING PINS 34 & 38

NOTES

1. R3 IS OMITTED ON NB58.

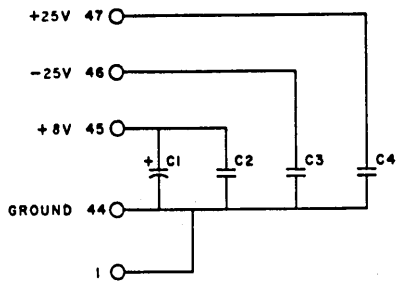

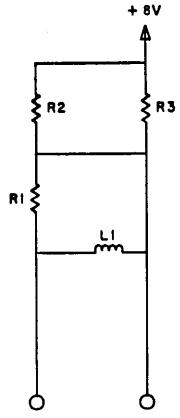

CIRCUIT			
	1	42	43
	2	40	41
	3	38	39
	4	36	37
	5	34	35
	6	32	33
	7	30	31
	8	28	29
	9	26	27
	10	24	25
	11	22	23
	12	20	21
	13	18	19
	14	16	17
	15	14	15
	16	12	13
	17	10	11
	18	8	9
	19	6	7
	20	4	5
	21	2	3

SDS

SCHEMATIC, DRIVER-CABLE INTERFACE

SIZE D | DWG NO. 104864 | REV C

MODEL NO. NB52&NB58

SHEET ASSY. 104866

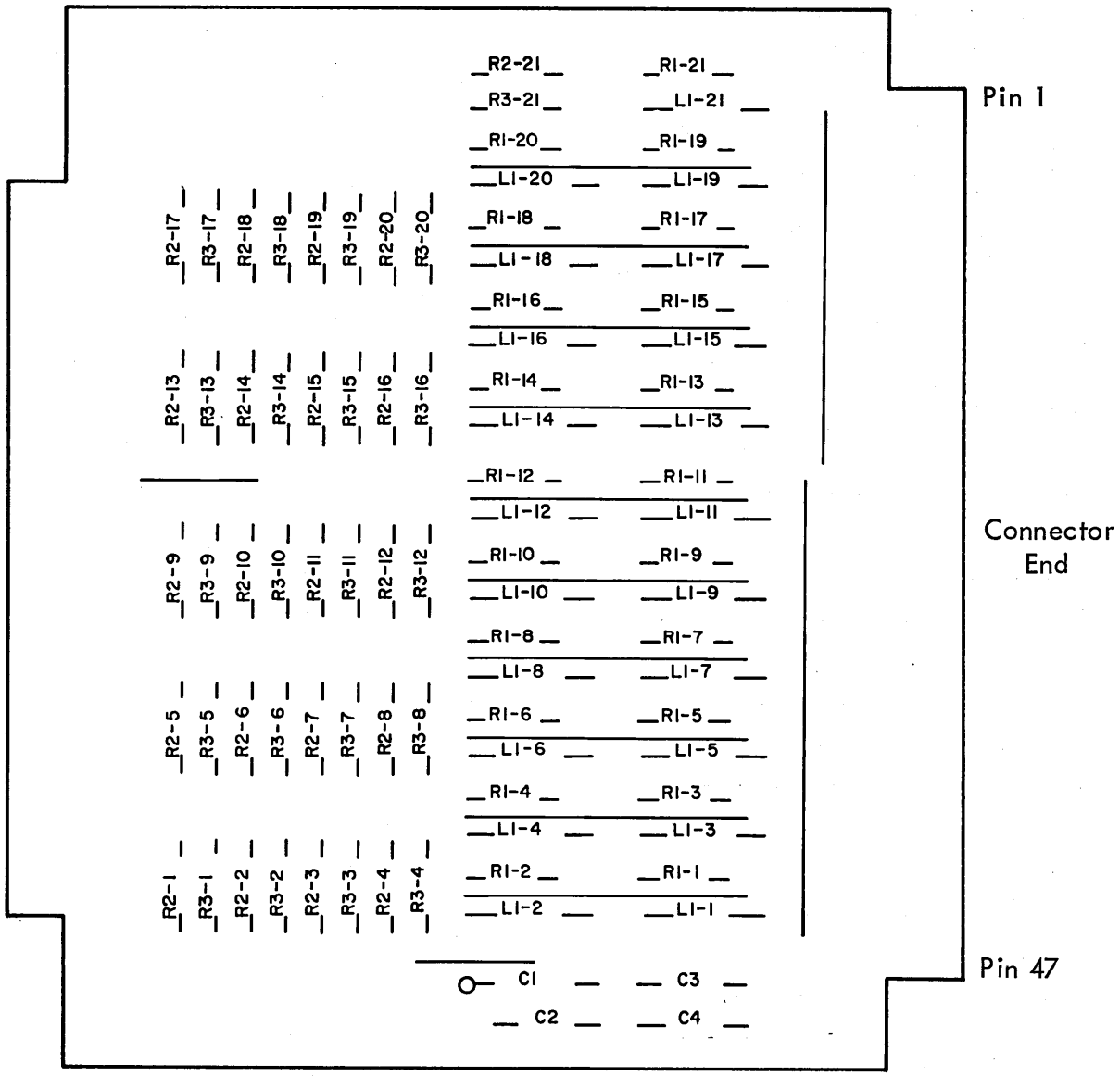

Drive Cable Interface NB52
104866B

REV B

DWG. NO. 104866

ML

MATERIAL LIST
DWG. TITLE

SDS SCIENTIFIC DATA SYSTEMS

Mod -

ML | DWG. NO. 104866 | REV B

ASSY, P.W. DRIVER CABLE INTERFACE # NB52 DATE 1/2/4 SHEET 2 OF 2

ITEM	DWG. TITLE	DWG. NO.	NO. REQ	REMARKS OR CKT. DESIG.
1	Board, Printed Wiring	104865	1	
2	Handle, Circuit Card	100016	1	
3	Eyelet, Tubular	103896-016	2	
4	Strip, Marker	100197	1	
5	Contact, Conn Upper	100097	23	
6	Contact, Conn Lower	100098	24	
7	Capacitor, Mylar	100308-103	3	C2, 3, 4
8	Capacitor, Tantalum	100312-156	1	C1
9	Resistor, $\frac{1}{2}$ watt	100111-151	21	R1
10	Inductor, Molded	100342-223	21	L1
11	Wire, Solid Bare	100042-024	5 in.	
12	Tubing, Teflon	100274-022	5 in	
13	Resistor, $\frac{1}{2}$ watt	100111-102	42	R2, 3

SCHEMATIC,
TERMINATION MODULE

D 104014 A

Z850/Z851

POLARIZING PINS: 12 & 40

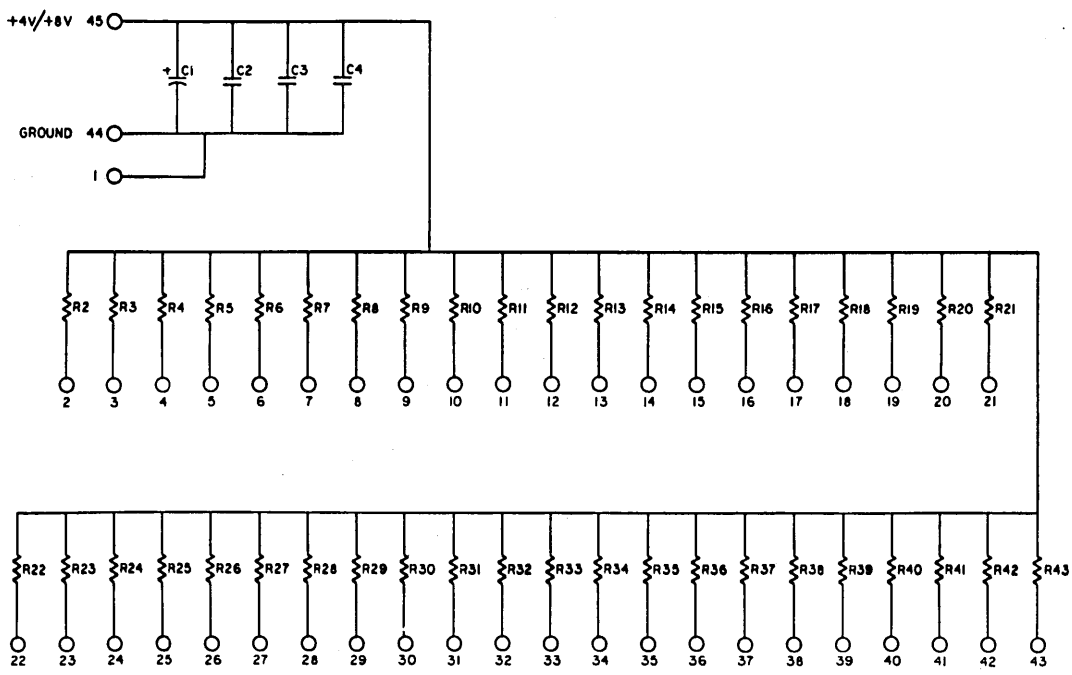

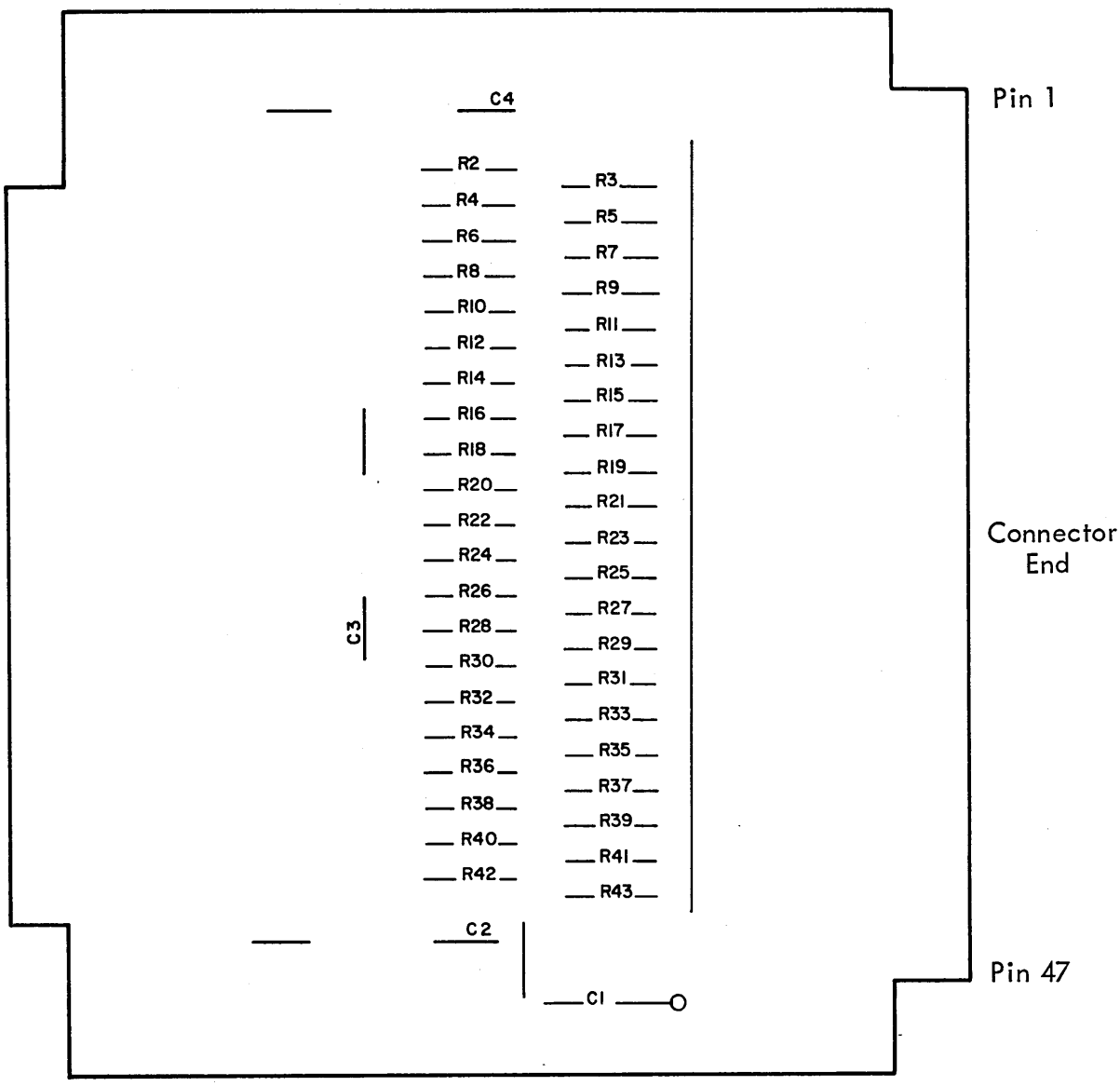

Termination Module +4 ZB50
104016A

REV A

DWG. NO. 104016

ML

MATERIAL LIST

DWG. TITLE
ASSEMBLY,
P.W. TERMINATION MODULE +4

SDS

COMPUTING DATA SYSTEMS

ML | DWG. NO. 104016 | REV A

MOD 0 ZB50 DATE 11/8/63 SHEET 2 OF 2

ITEM	DWG. TITLE	DWG. NO.	NO. REQ	REMARKS OR CKT. DESIG.
1	Board, Printed Wiring	104015	1	
2	Handle, Circuit Card	100016	1	
3	Eyelet, Tubular	103896-016	2	
4	Strip, Marker	100197	1	
5	Contact, Conn. Upper	100097	23	
6	Contact, Conn. Lower	100098	24	
7	Capacitor, Mylar	100308-334	3	C2, 3, 4
8	Capacitor, Tantalum	100312-156	1	C1
9	Resistor, ½ watt	100111-151	42	R2 thru R43
10	Wire, Solid Bare	100042-025	5 in.	
11	Tubing, Teflon	100274-022	5 in.	

104329 C

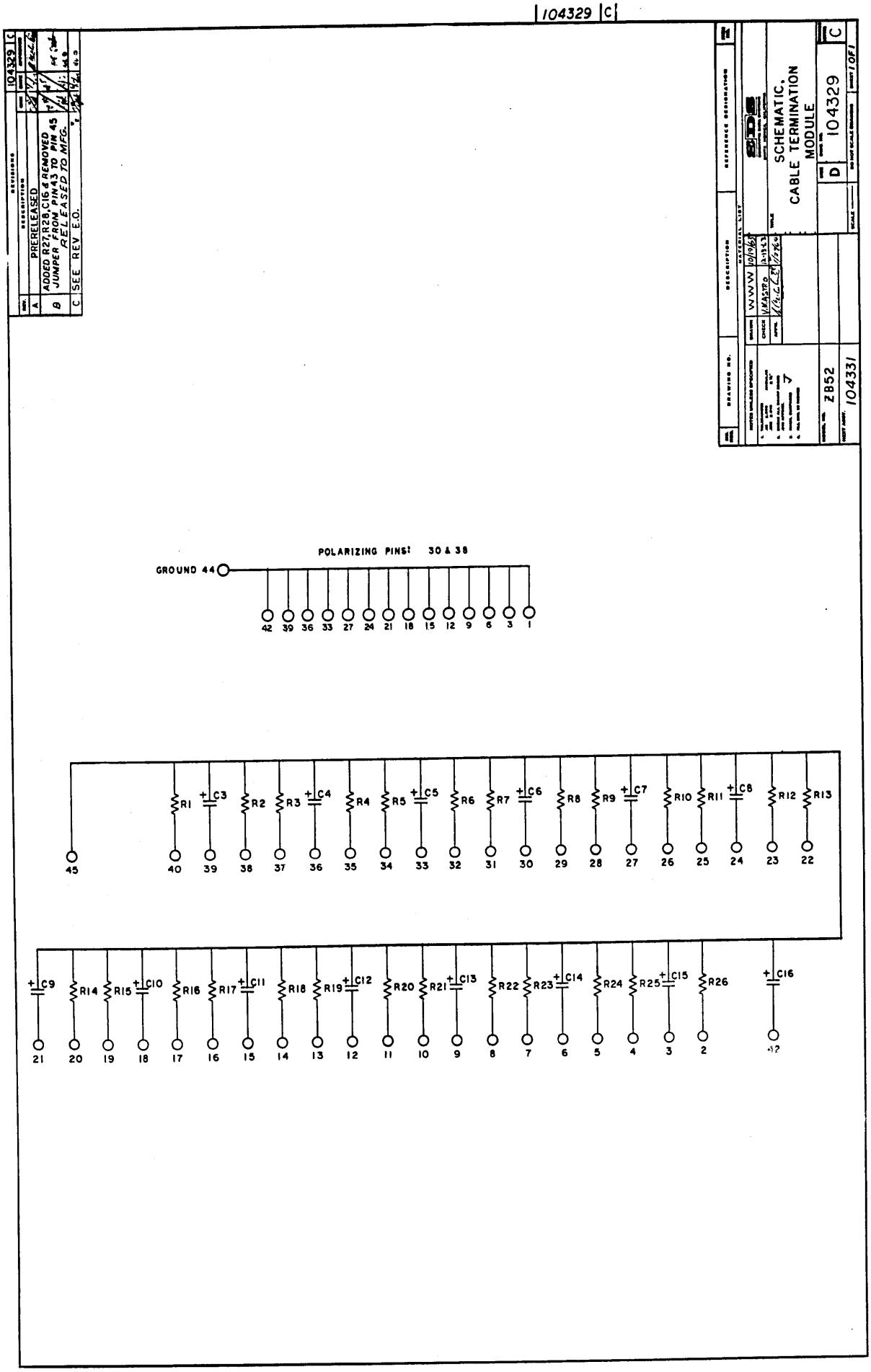

REVISIONS
104329 C
REV.
DESCRIPTION
A
PRERELEASED
B
ADDED R27,R28,C16 & REMOVED JUMPER FROM PIN 43 TO PIN 45 RELEASED TO MFG.
C
SEE REV E.O.
DRAWING NO.
DESCRIPTION
REFERENCE DESIGNATION
MATERIAL LIST
DRAWN
WWW
10/19/65
CHECK
V.MASTRO
APPR.
SDS
SCHEMATIC, CABLE TERMINATION MODULE
D
104329
C
SHEET 1 OF 1
ZB52
104331
POLARIZING PINS: 30 & 38
GROUND 44
42 39 36 33 27 24 21 18 15 12 9 6 3 1
R1 C3 R2 R3 C4 R4 R5 C5 R6 R7 C6 R8 R9 C7 R10 R11 C8 R12 R13
45 40 39 38 37 36 35 34 33 32 31 30 29 28 27 26 25 24 23 22
C9 R14 R15 C10 R16 R17 C11 R18 R19 C12 R20 R21 C13 R22 R23 C14 R24 R25 C15 R26 C16
21 20 19 18 17 16 15 14 13 12 11 10 9 8 7 6 5 4 3 2 42

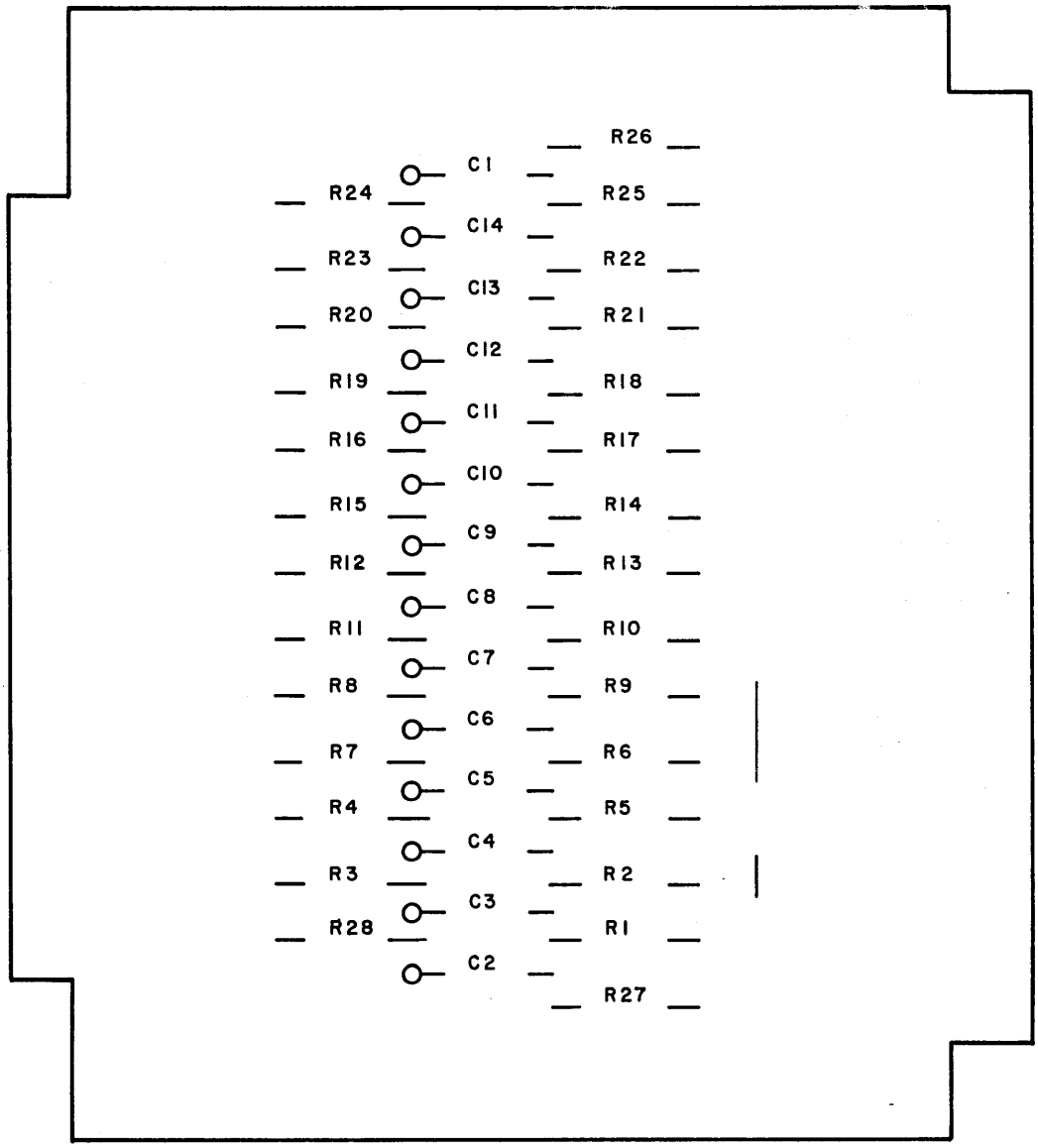

Cable Termination Module ZB52
104331E

REV E

DWG. NO. 104331

ML

MATERIAL LIST

DWG. TITLE
ASSEMBLY, P. W. CABLE
TERMINATION MODULE

SDS SCIENTIFIC DATA SYSTEMS

ML | DWG. NO. 104331 | REV E

MOD # ZB52 DATE 12/3 SHEET 2 OF 2

ITEM	DWG. TITLE	DWG. NO.	NO. REQ	REMARKS OR CAT. DESIG.
1	Board, Printed Wiring	104330	1	
2	Handle, Circuit Card	100016	1	
3	Eyelet, Tubular	103896-016	2	
4	Strip, Marker	100197	1	
5	Contact, Conn. Upper	100097	23	
6	Contact, Conn. Lower	100098	24	
~~7~~	~~Capacitor, Mylar~~	~~100308-103~~	~~14~~	~~G3 thru G16~~
8	Capacitor, Tantalum	100312-156	14	C1 thru C14
9	Resistor, Metal Film	100680-330	26	R1 thru R26
10	Wire, Solid Bare	100042-024	1 in	
11	Tubing, Teflon	100274-022	1 in	
~~12~~	~~Plate, Heatsink~~	~~106573~~	~~1~~	
13	Heatsink (Extruded)	106579	1	
14	Screw, Flat Hd. Phillips 100°	100012-307	2	
15	Washer, Flat	100018-300	2	
16	Washer, Lock Int Tooth	100024-300	2	
17	Nut, Hex Machine	100008-300	2	

3 of 4

104993 A

REV.	DESCRIPTION	CODE	DATE	APPROVED
A	RELEASED TO MFG			

REVISIONS

NOTES:

1. R3, R5 THRU R9, R11, R14 THRU R33, R35, R40, R41 & R42 ARE OMITTED.

POLARIZING PINS: 12 & 40

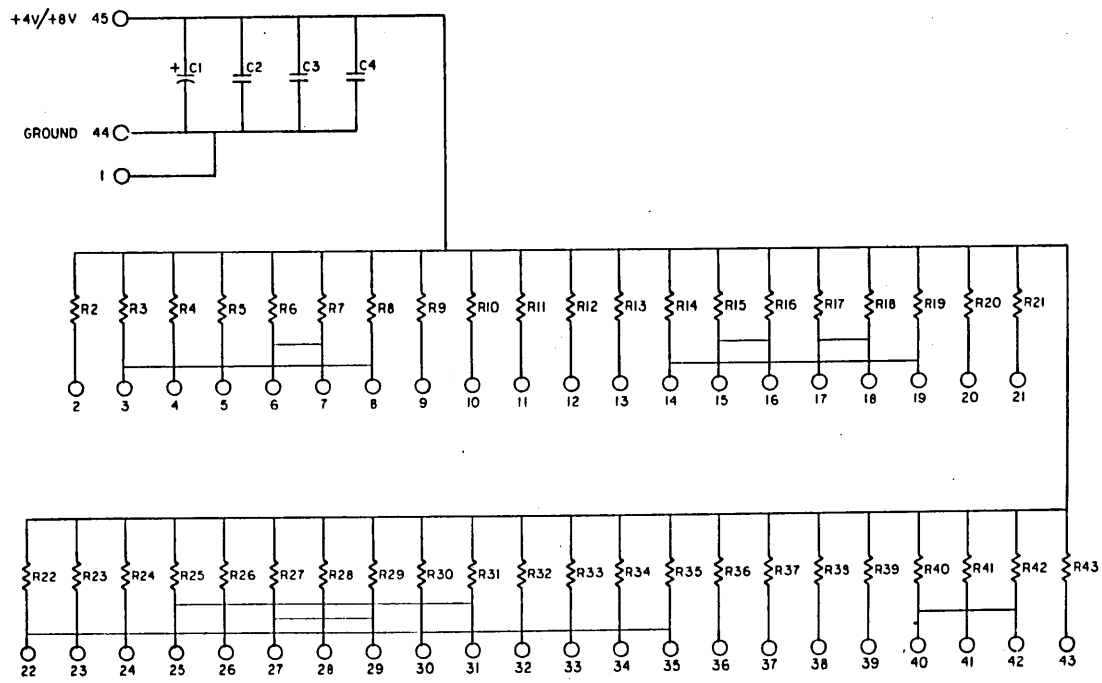

DRAWING NO. | DESCRIPTION | REFERENCE DESIGNATION

MATERIAL LIST

DRAWN WWW 10/19/63

CHECK J. Mutto 4/3/64

APPR. WRB 4/4/64

TITLE SCHEMATIC, TERMINATION MODULE

SIZE D | DWG NO. 104993 | REV A

SCALE — | DO NOT SCALE DRAWING | SHEET 1 OF 1

MODEL NO. ZB55

NEXT ASSY. 104994

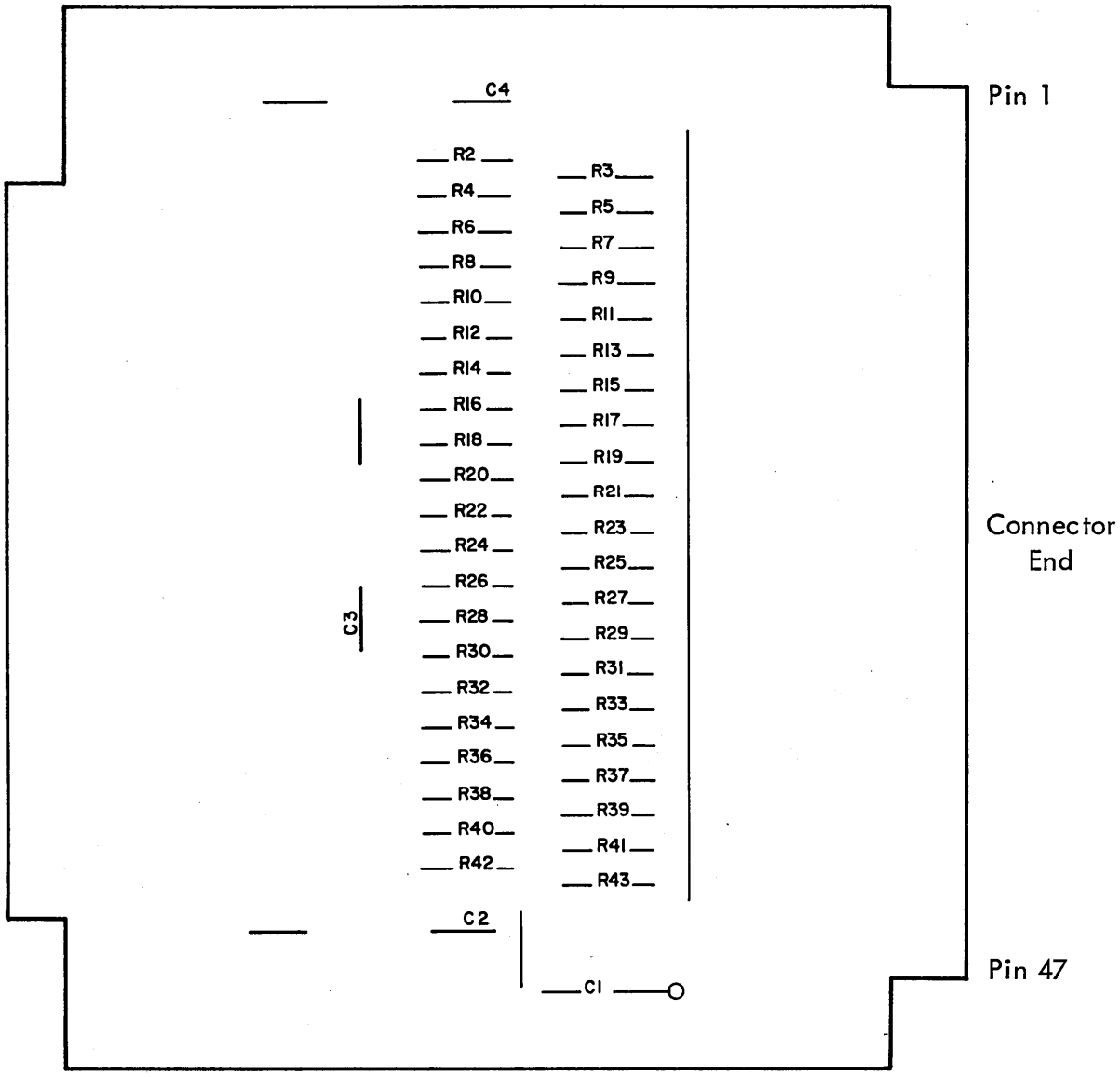

Termination Module ZB55
104994B

REV

DWG. NO. 104994

ML

MATERIAL LIST
DWG. TITLE
ASSY, P. W.
TERMINATION MODULE

SDS — SCIENTIFIC DATA SYSTEMS

ML | DWG. NO. 104994 | REV

MOD # ZB55 DATE 3/24 SHEET 2 OF 2

ITEM	DWG. TITLE	DWG. NO.	NO. REQ	REMARKS OR CAT. BASIC
1	Board, Printed Wiring	104015	1	
2	Handle, Circuit Board	100016	1	
3	Eyelet, Tubular	103896-016	2	
4	Strip, Marker	100197	1	
5	Contact, Conn Upper	100097	23	
6	Contact, Conn Lower	100098	24	
7	Capacitor, Mylar	100308-334	3	C2, 3, 4
8	Capacitor, Tantalum	100312-156	1	C1
9	Resistor, ½ watt	100111-151	11	R2, 4, 10, 12, 13, 34, 36, 37, 38, 39, 43
10	Wire, Solid Bare	100042-024	13 in	
11	Tubing, Teflon	100274-022	13 in	

REV	DESCRIPTION
A	RELEASED

SDS

SCHEMATIC,
CABLE TERMINATION
MODULE

D 113043 A

DRAWN
CHECK
APPR

DRAWING NO. 2873
PART NO. 111991

SCALE DWG SHEET 1 OF 1

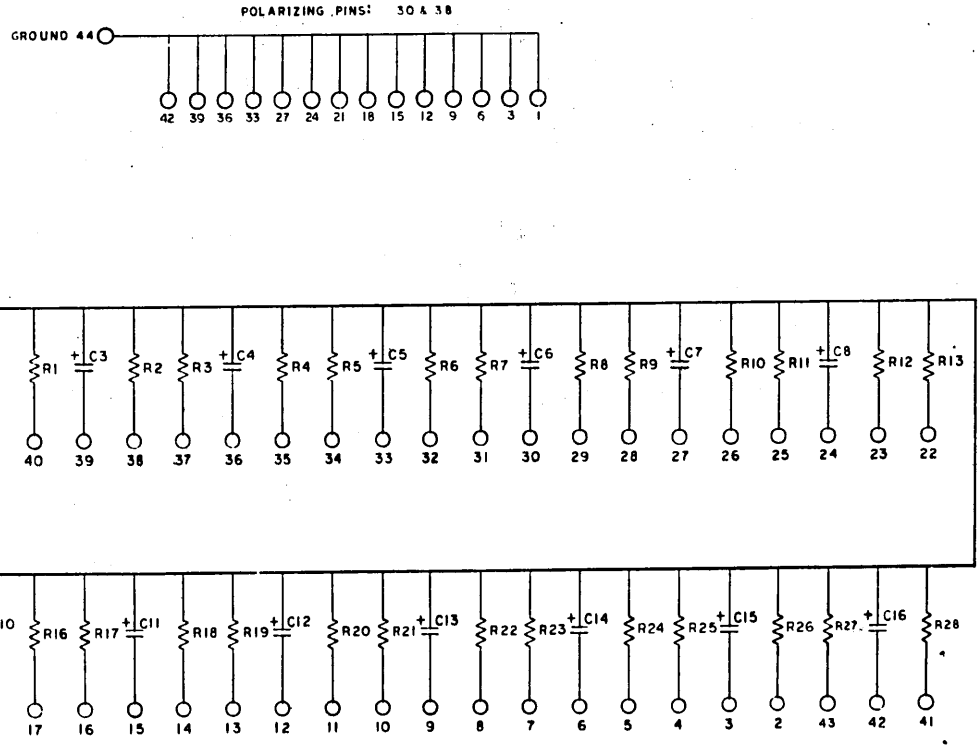

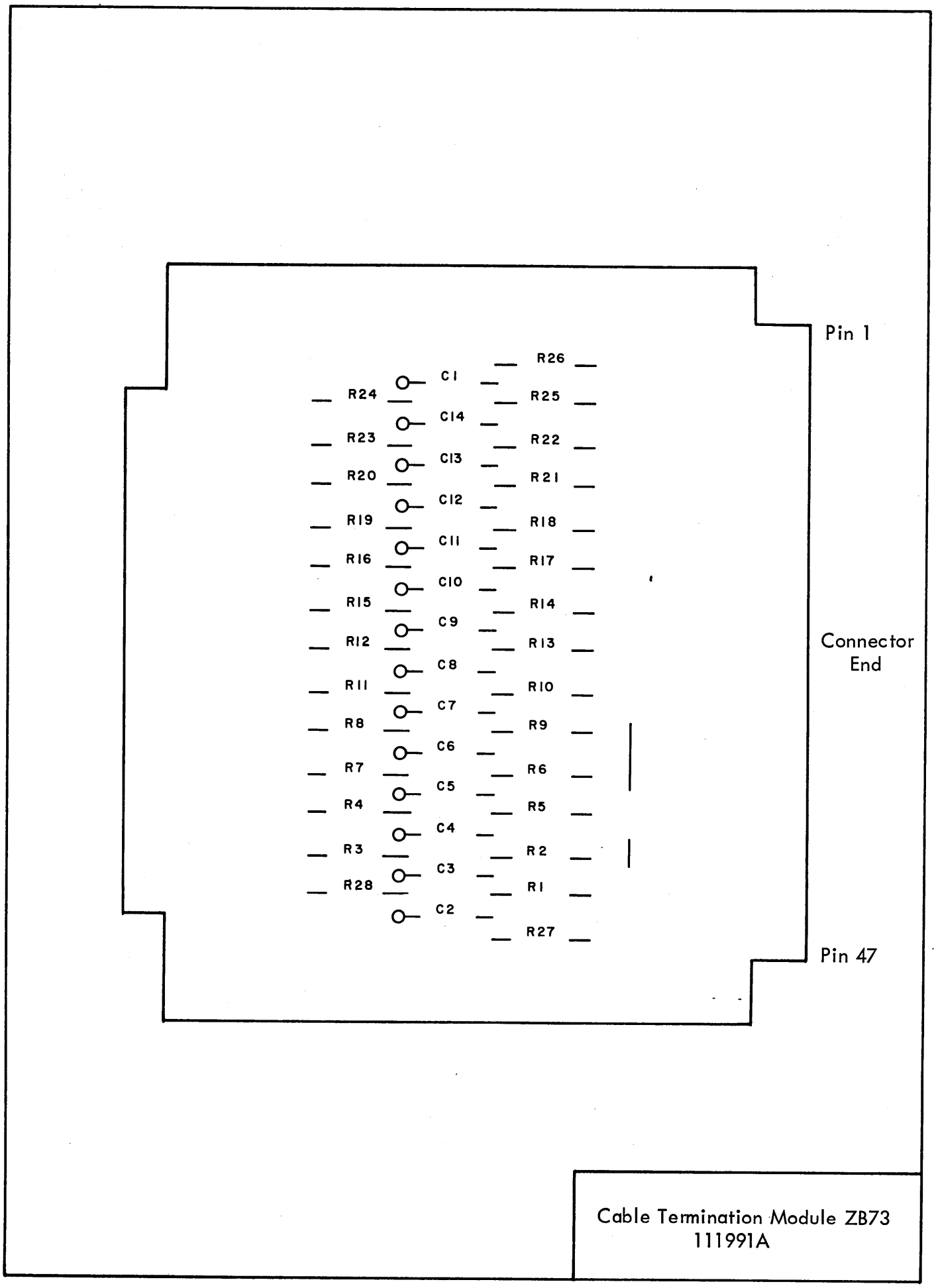
Pin 1
R26
C1
R24
R25
C14
R23
R22
C13
R20
R21
C12
R19
R18
C11
R16
R17
C10
R15
R14
C9
R12
R13
C8
R11
R10
C7
R8
R9
C6
R7
R6
C5
R4
R5
C4
R3
R2
C3
R28
R1
C2
R27
Pin 47
Connector End
Cable Termination Module ZB73
111991A

REV. A

DRAWING NO. 111991

ML

SDS SCIENTIFIC DATA SYSTEMS

MATERIAL LIST

ML | DRAWING NO. 111991 | REV. A

DRAWING TITLE Assy, P.W. Cable Termination Module MODEL NO. ZB73 DATE 2/1/65 SHEET 2 OF 2

ITEM NO.	DRAWING TITLE	DWG. NO.	NO. REQ.	REMARKS ON CKT. DESIG.
1	Board, Printed Wiring	104330	1	
2	Handle, Circuit Card	100016	1	
3	Eyelet, Tubular	103896-016	2	
4	Strip, Marker	100197	1	
5	Contact, Conn. Upper	100097	23	
6	Contact, Conn. Lower	100098	24	
7	Capacitor, Tantalum	100312-156	14	C1 thru C14
8	Resistor, Metal Film	100680-330	28	R1 thru R28
9	Wire, Solid Bare	100042-024	1in	
10	Tubing, Teflon	100274-022	1in	
11	Heatsink(Extruded)	106579	1	
12	Screw, Flat Hd. Phillips 100°	100012-307	2	
13	Washer, Flat	100018-300	2	
14	Washer, Lock Int. Tooth	100024-300	2	
15	Nut, Hex Machine	100008-300	2	
16	Schematic	113043	x	ref
17	Dwg List	113044	x	ref
18	Test Spec	113045	x	ref